Emma®

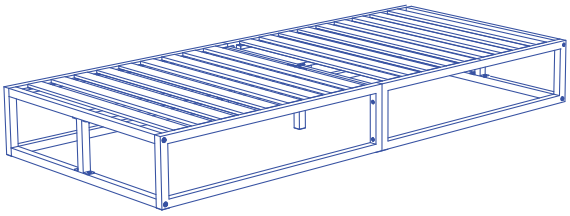

80 x 190 cm
90 x 190 cm
90 x 200 cm
92 x 188 cm
100 x 190 cm 1-6

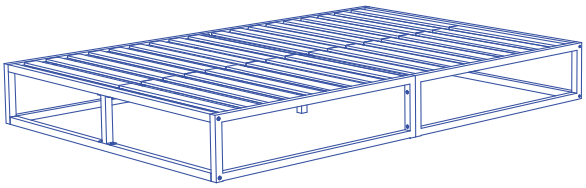

107 x 203 cm
122 x 183 cm
135 x 190 cm
138 x 188 cm
140 x 200 cm
150 x 190 cm
150 x 200 cm
153 x 203 cm
160 x 190 cm
160 x 200 cm 13-18

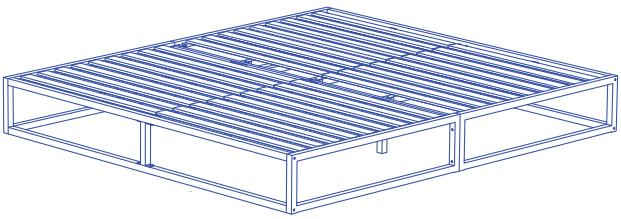

180 x 200 cm
183 x 203 cm
200 x 190 cm
200 x 200 cm. 25-30

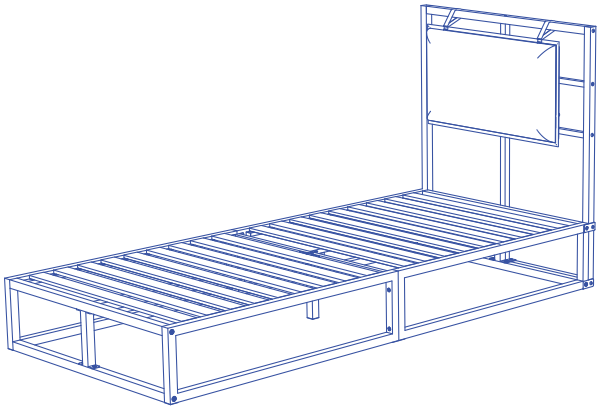

80 x 190 cm
90 x 190 cm
90 x 200 cm
92 x 188 cm
100 x 190 cm 1-12

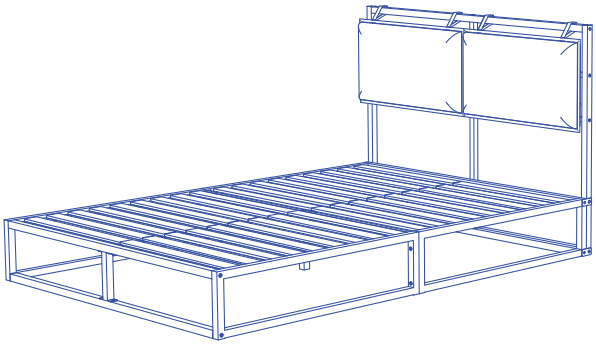

107 x 203 cm
122 x 183 cm
135 x 190 cm
138 x 188 cm
140 x 200 cm
150 x 190 cm
150 x 200 cm
153 x 203 cm
160 x 190 cm
160 x 200 cm 13-24

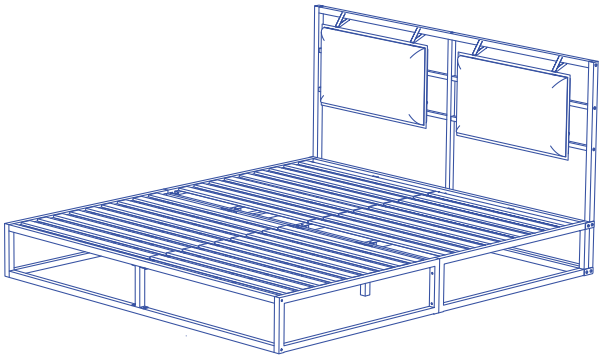

180 x 200 cm
183 x 203 cm
200 x 190 cm
200 x 200 cm. 25-36

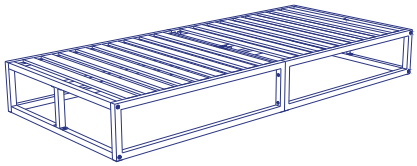

80 x 190 cm/90 x 190 cm/90 x 200 cm
92 x 188 cm/100 x 190 cm

1

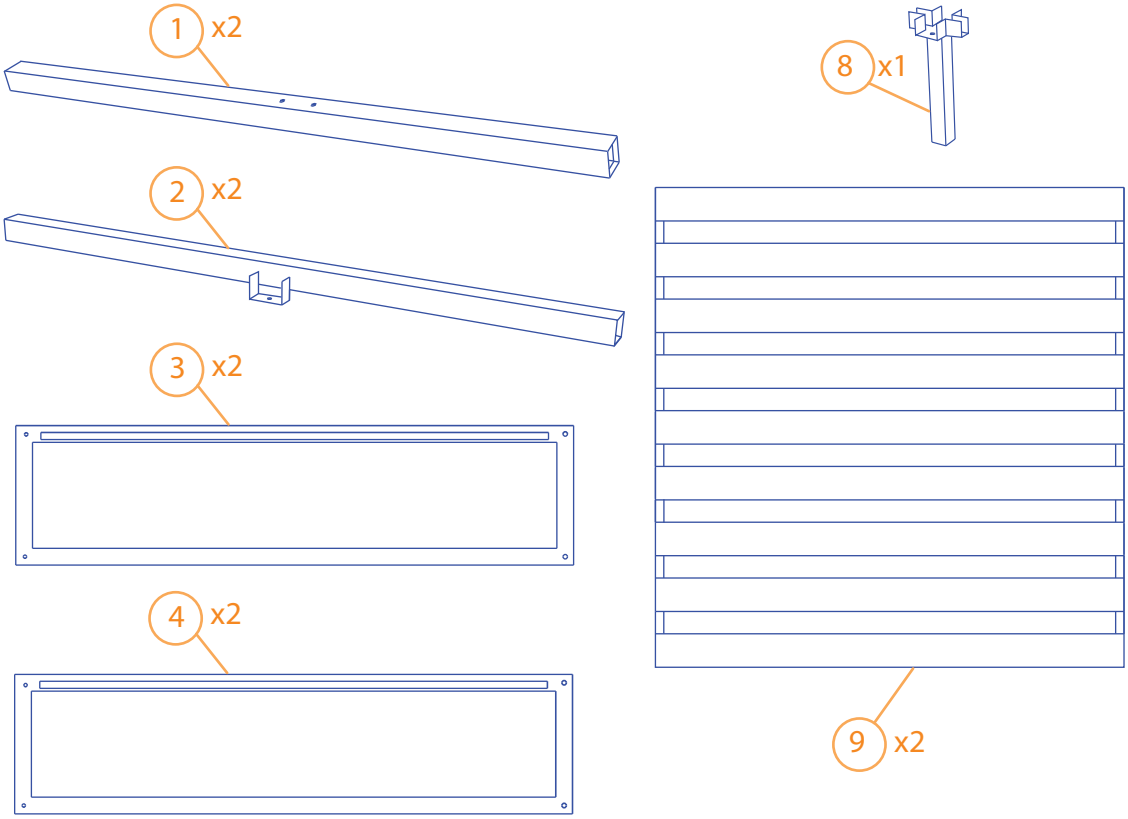

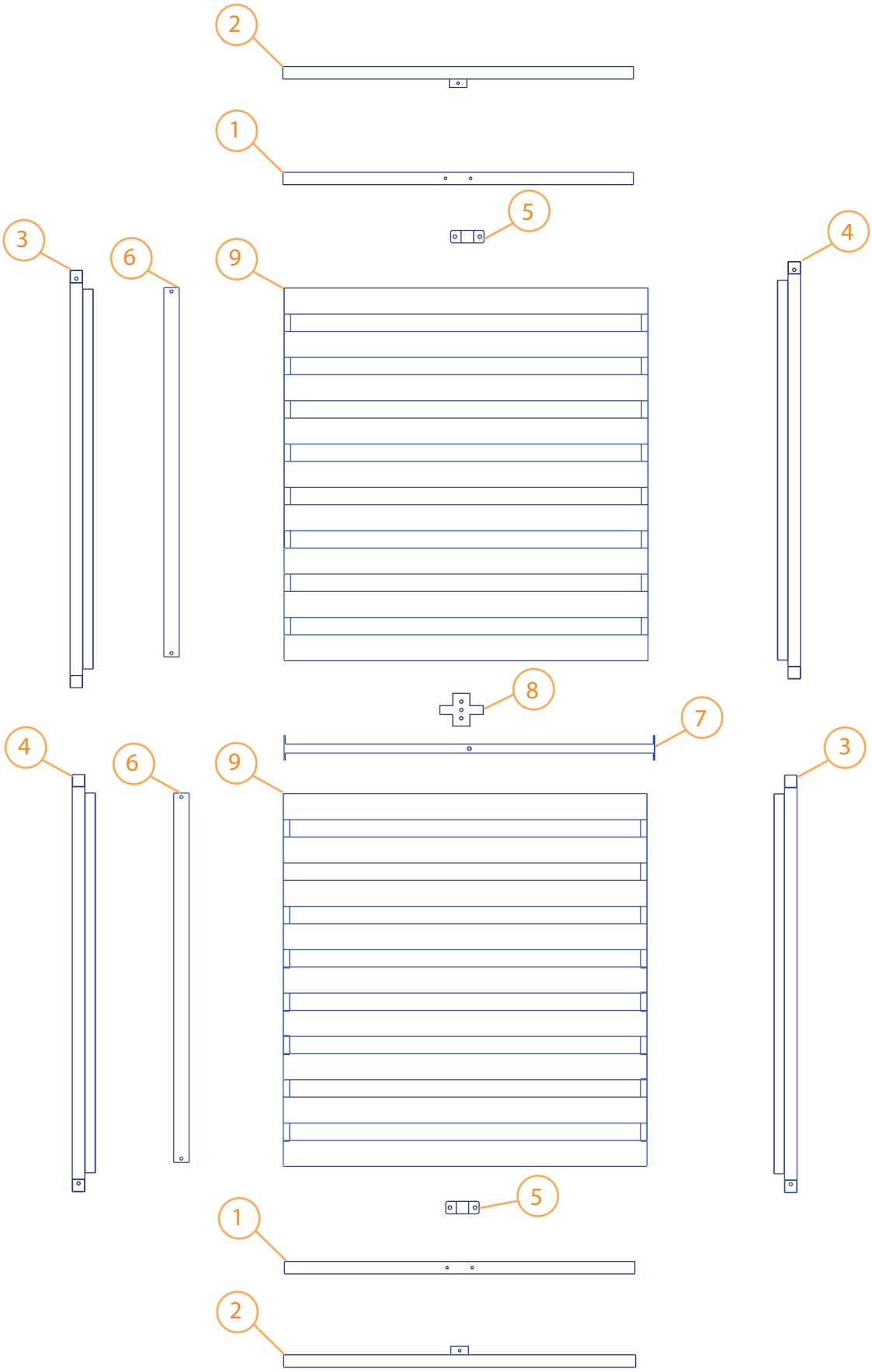
2
1
5
3
6
9
4
8
7
4
6
9
3
5
1
2

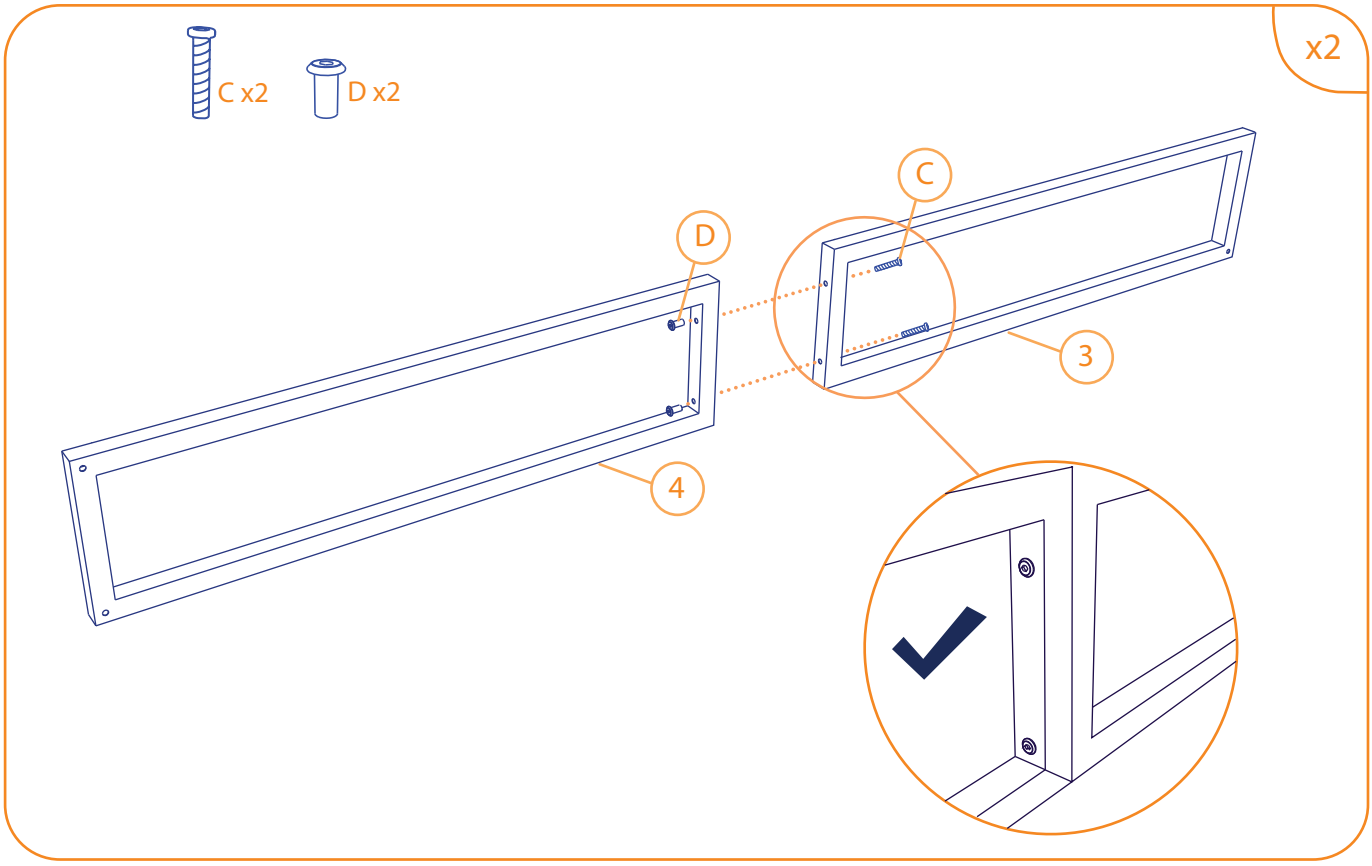
x2
C x2
D x2
C
D
3
4

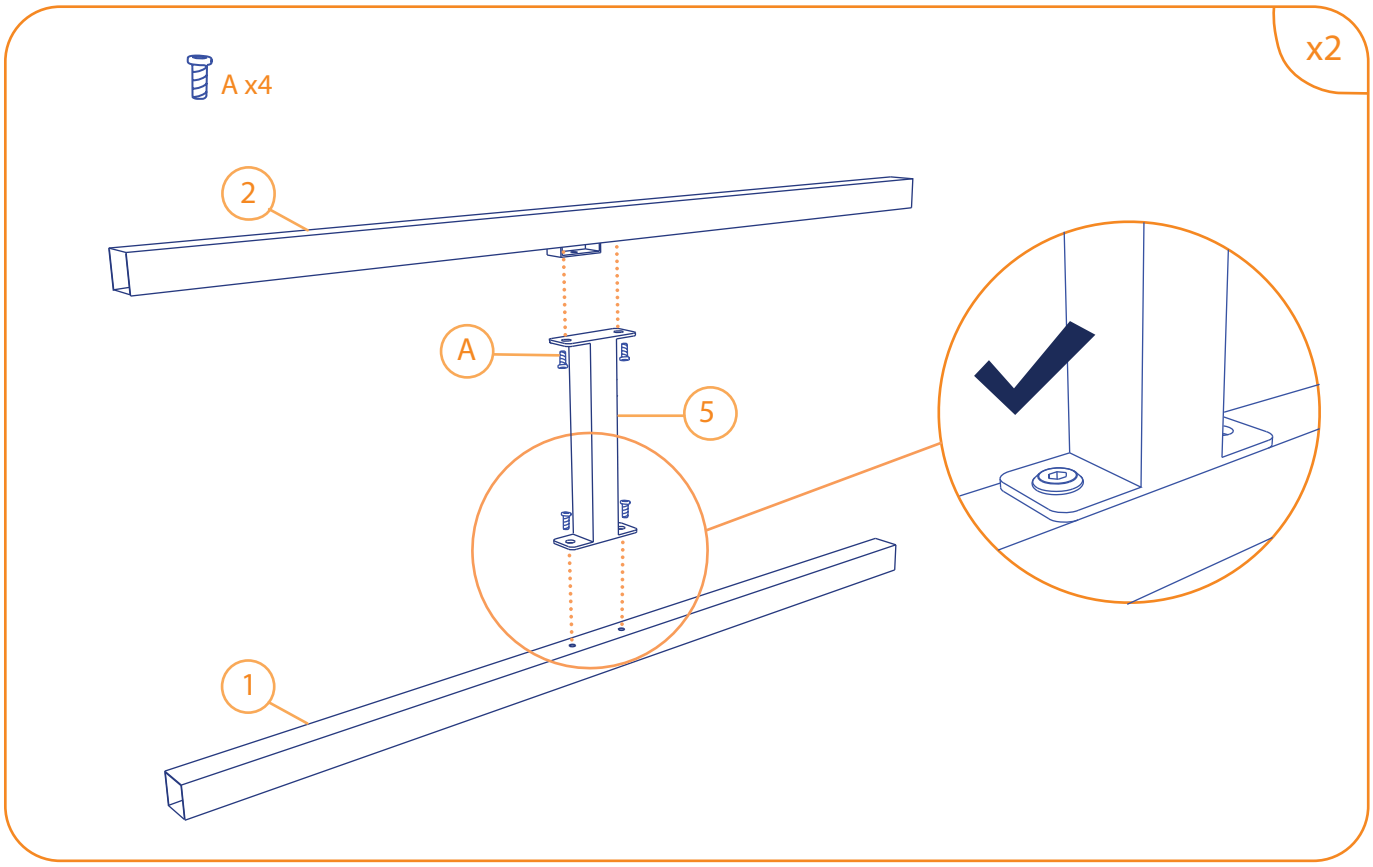
x2
A x4
2
A
5
1

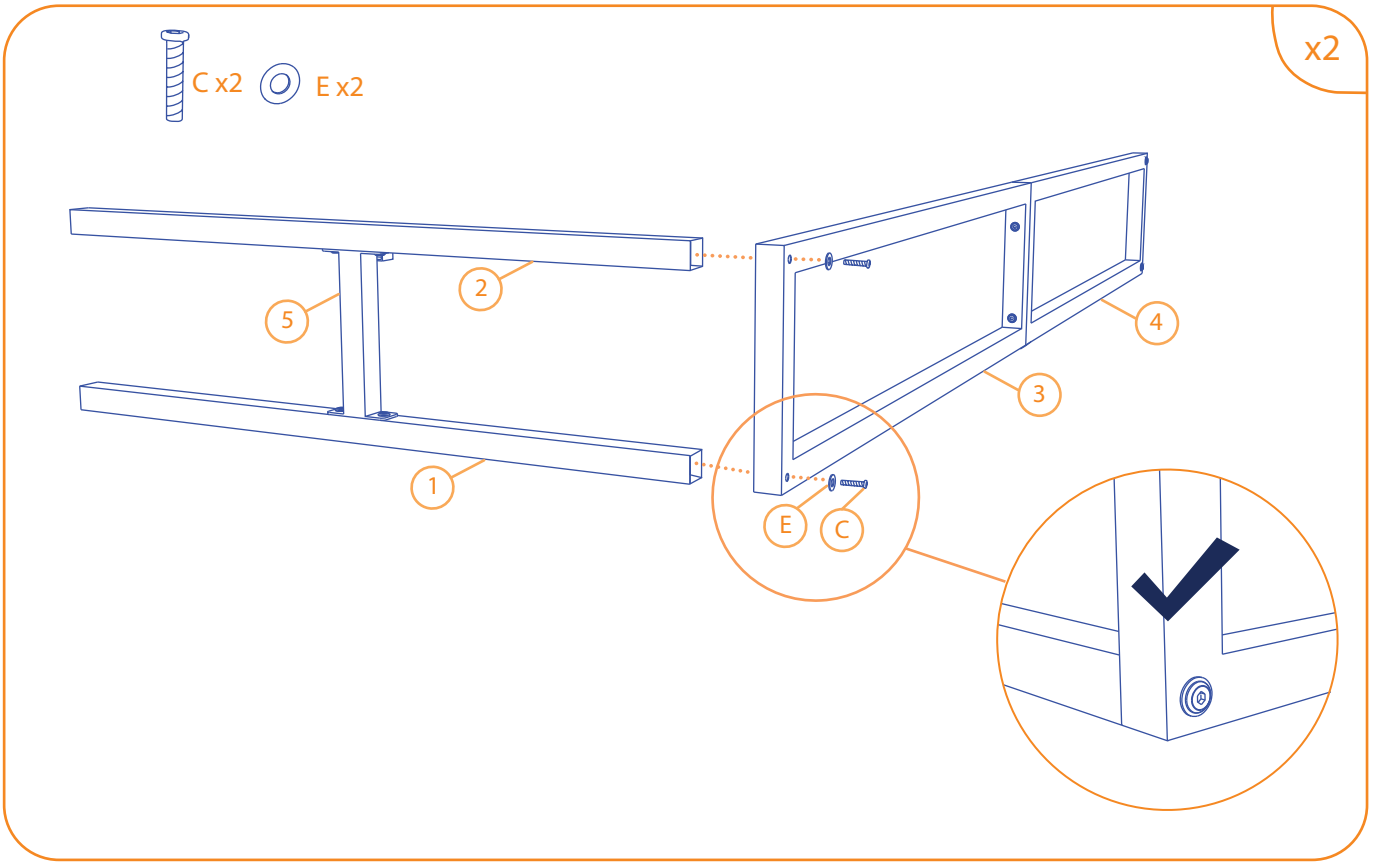
C x2
E x2
x2
5
2
4
3
1
E
C

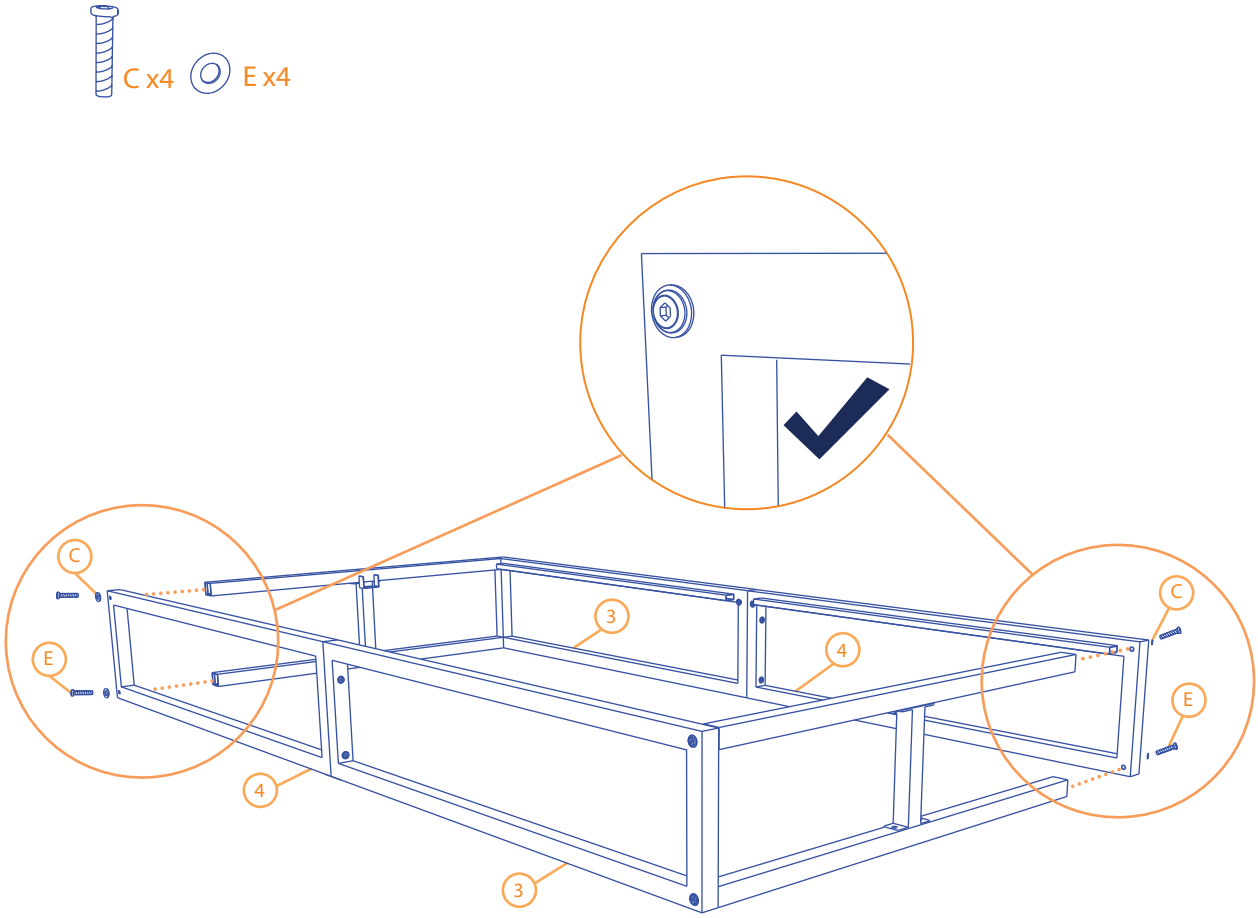
C x4
E x4
C
E
3
4
4
3
C
E

5

B x1 A x4

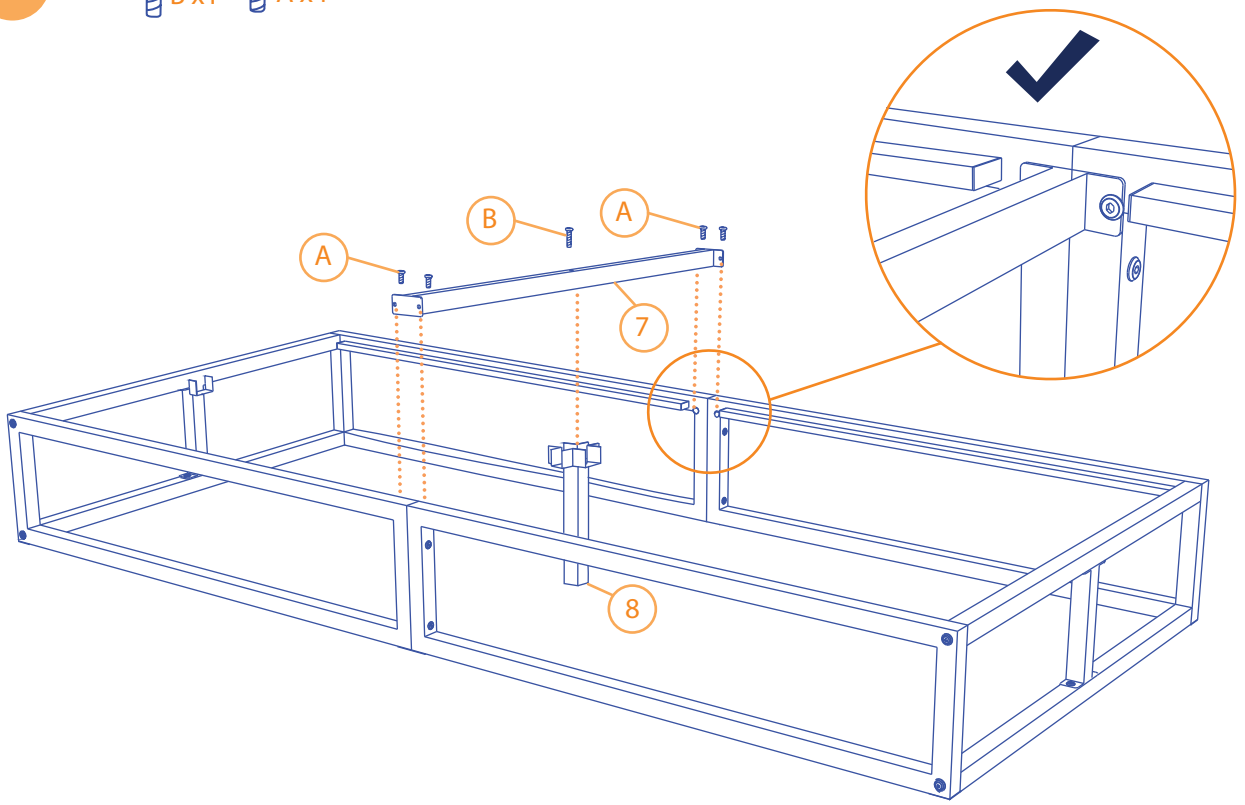

6

B x4

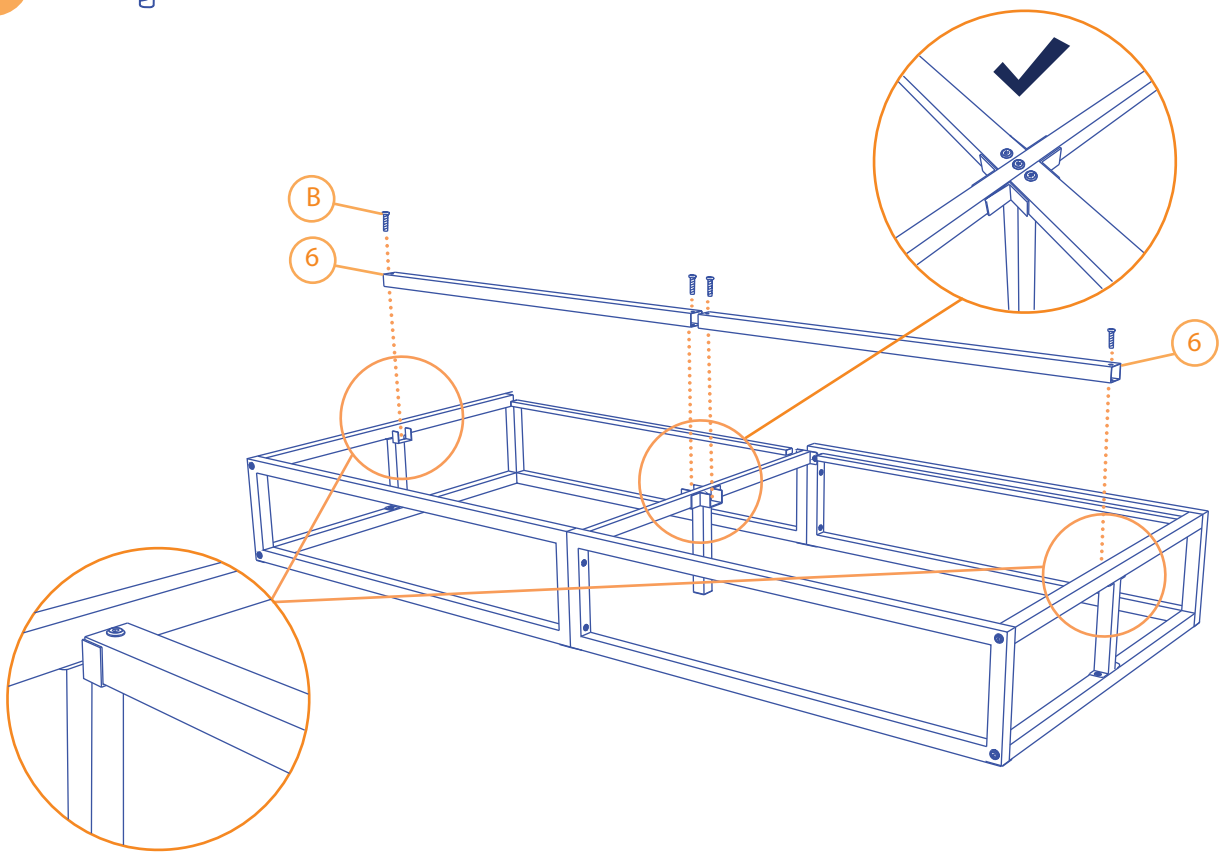

7

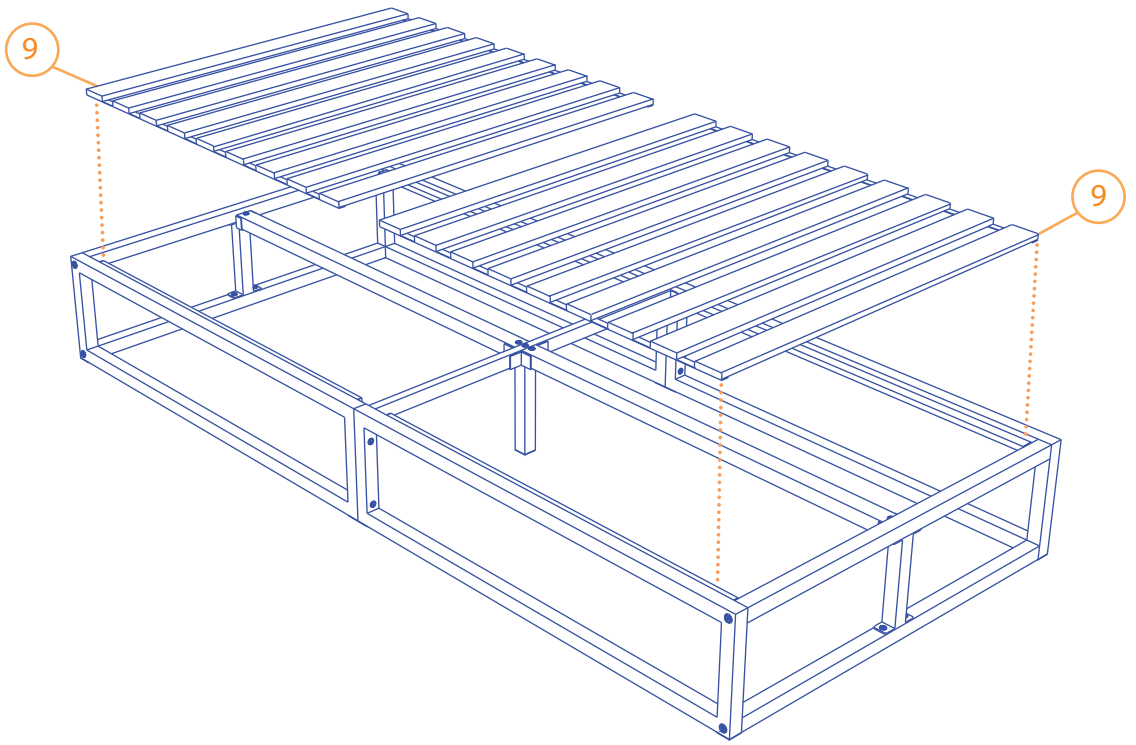

8

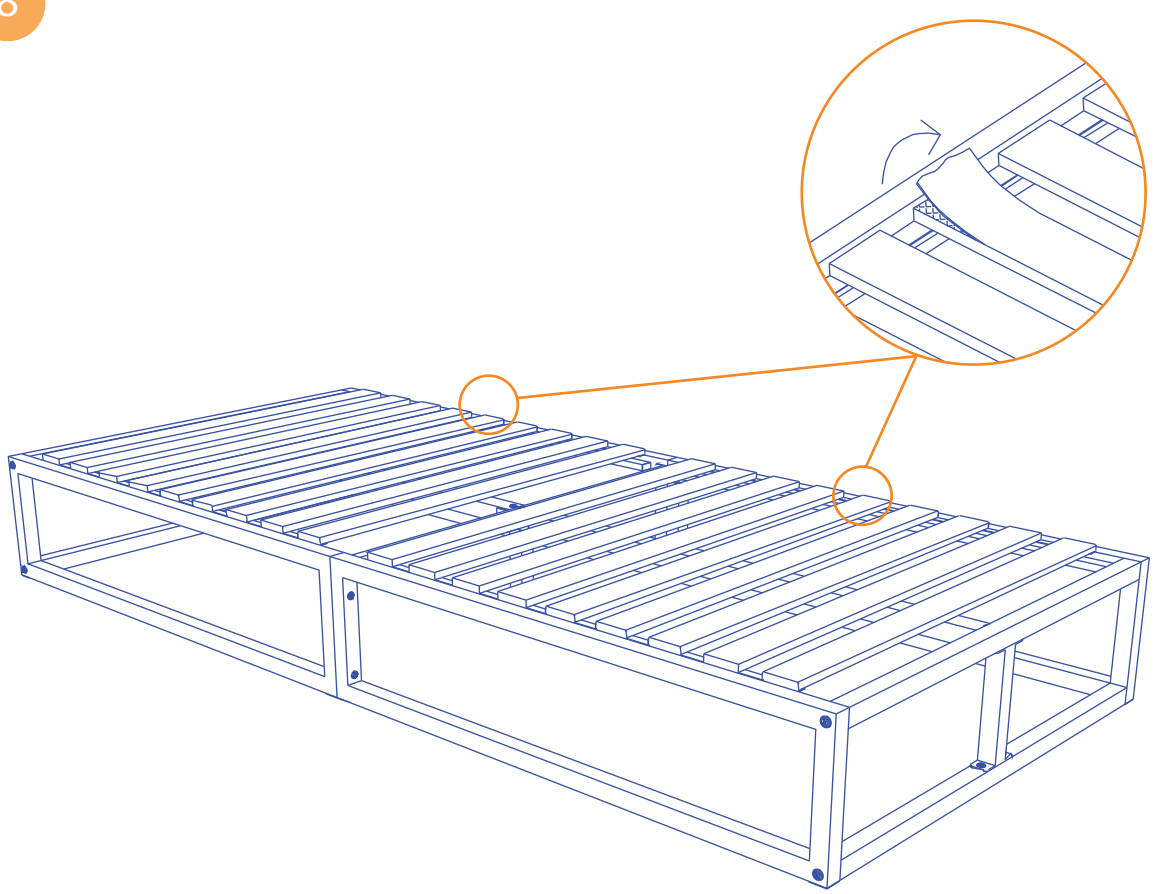

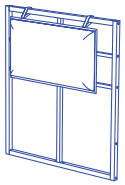

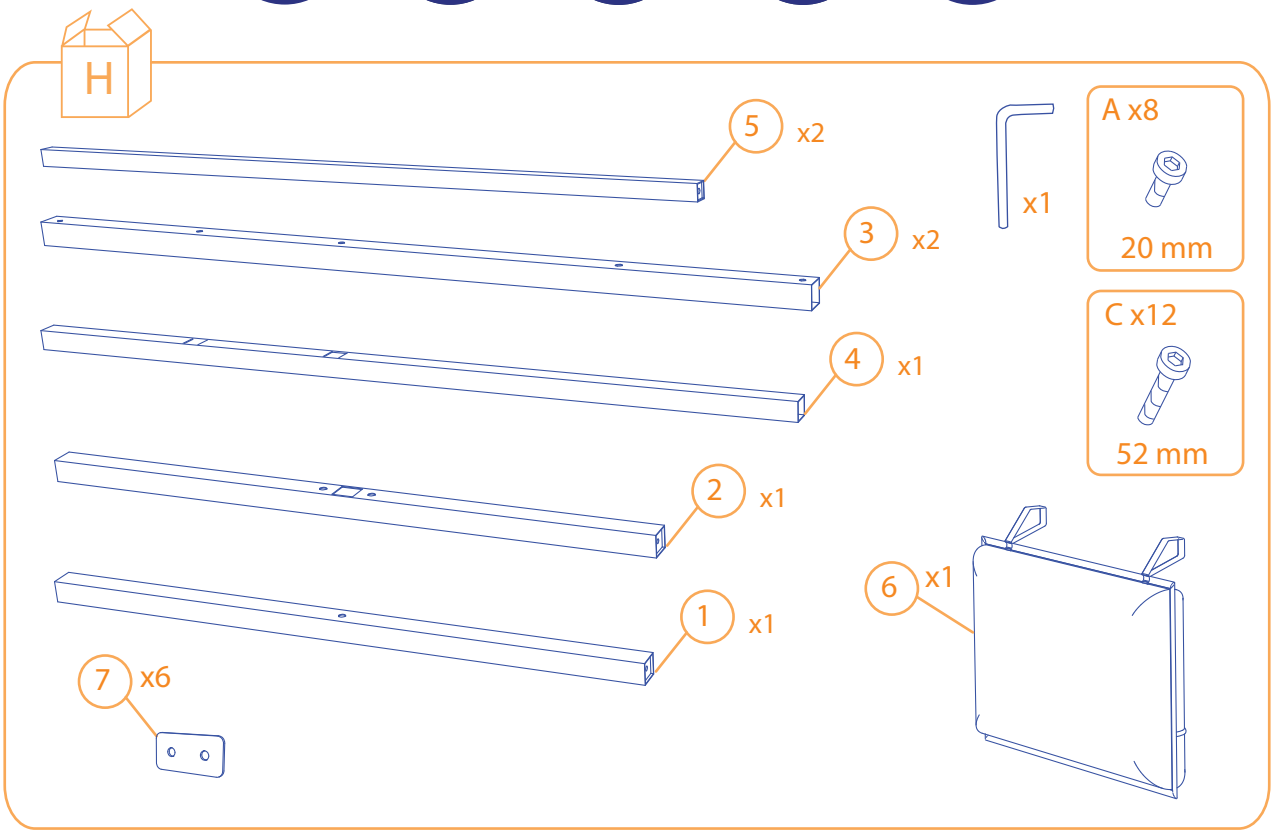
H
5 x2
3 x2
4 x1
2 x1
1 x1
7 x6
6 x1
x1
A x8
20 mm
C x12
52 mm

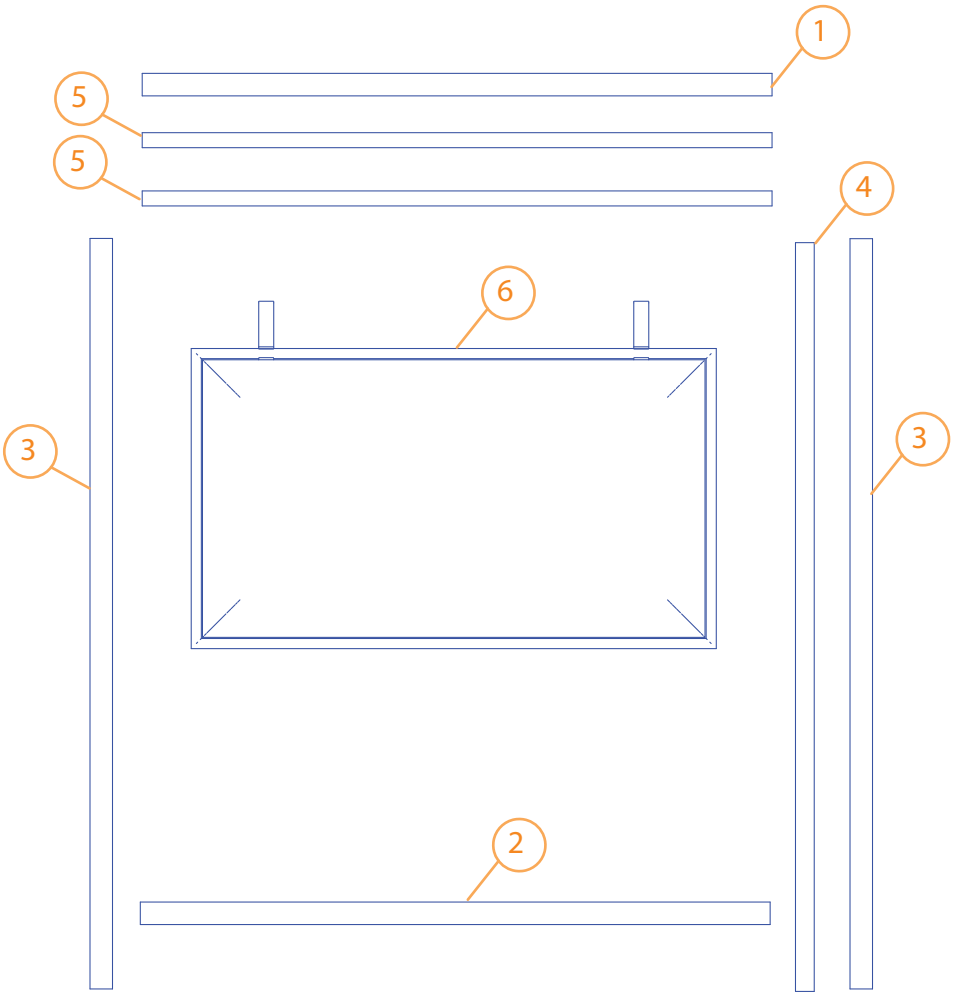
1
5
5
4
6
3
3
2

1

x1 A x1

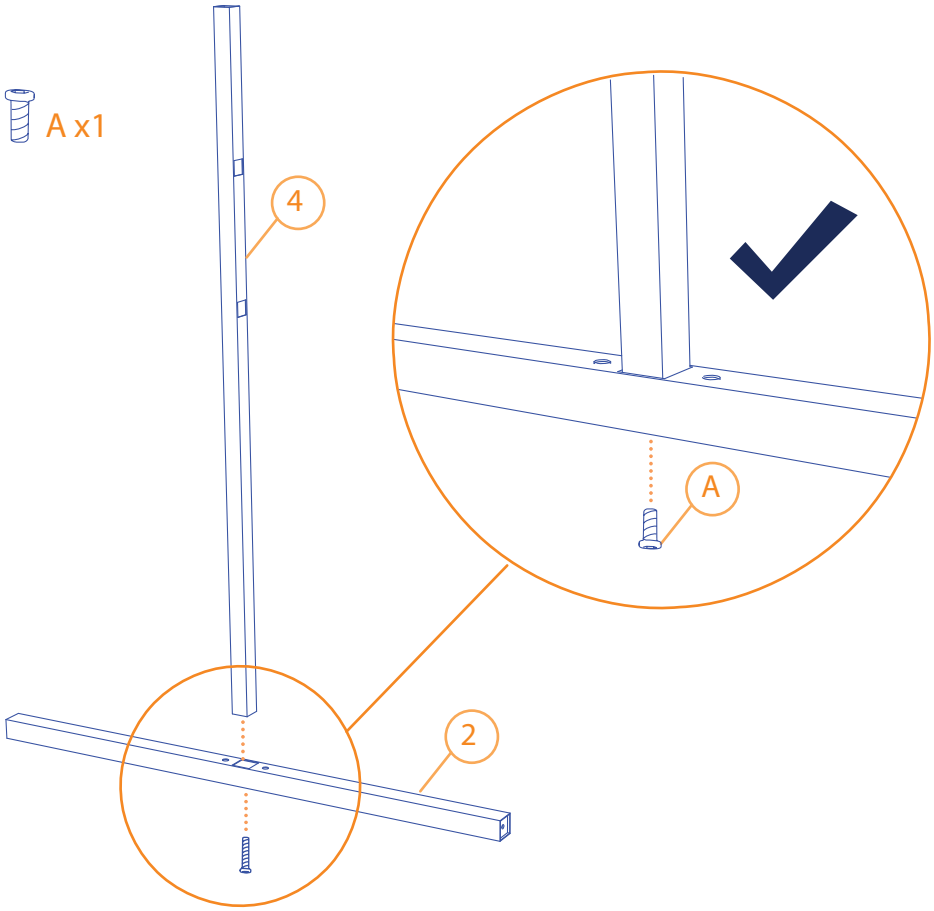

2

x1 A x1

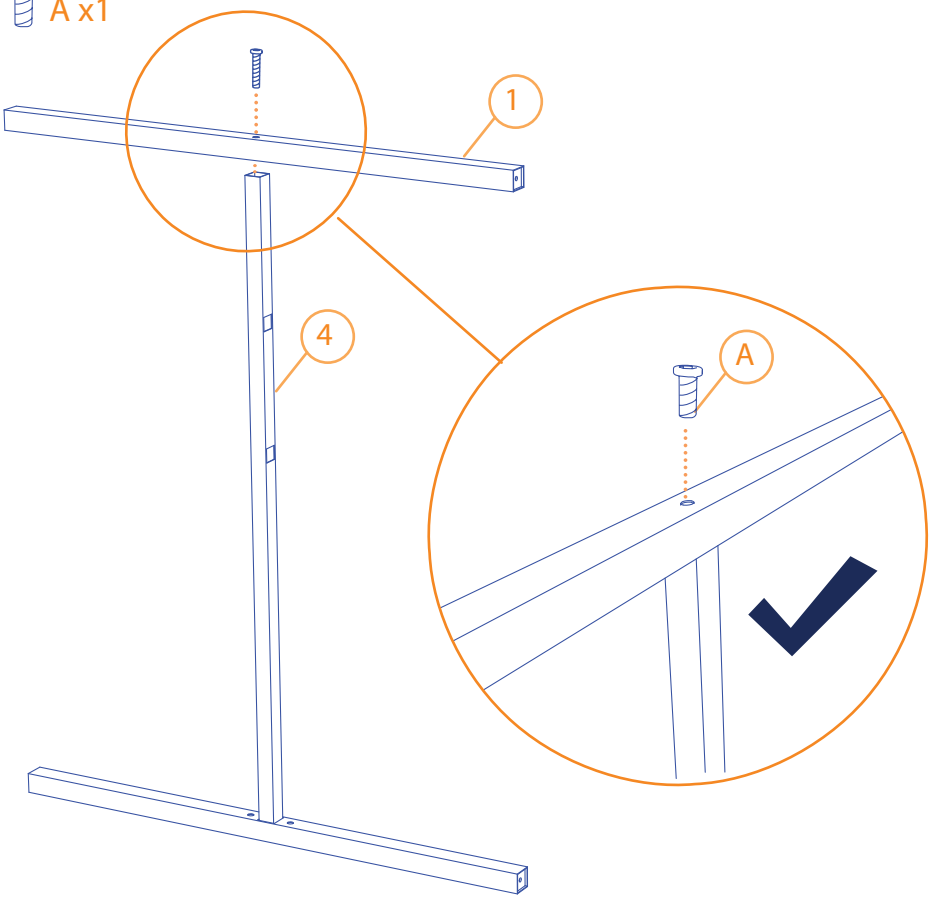

3

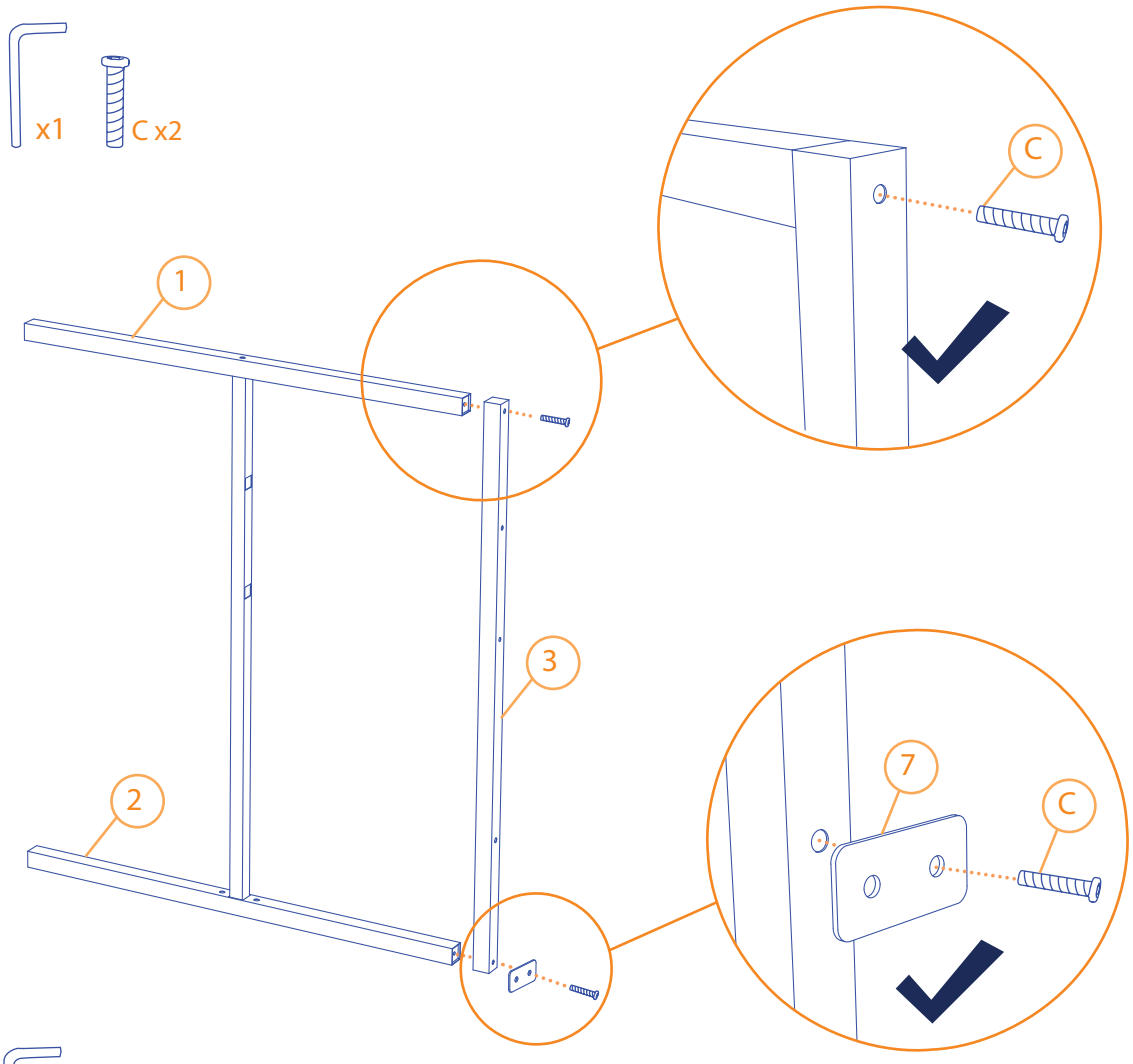

4

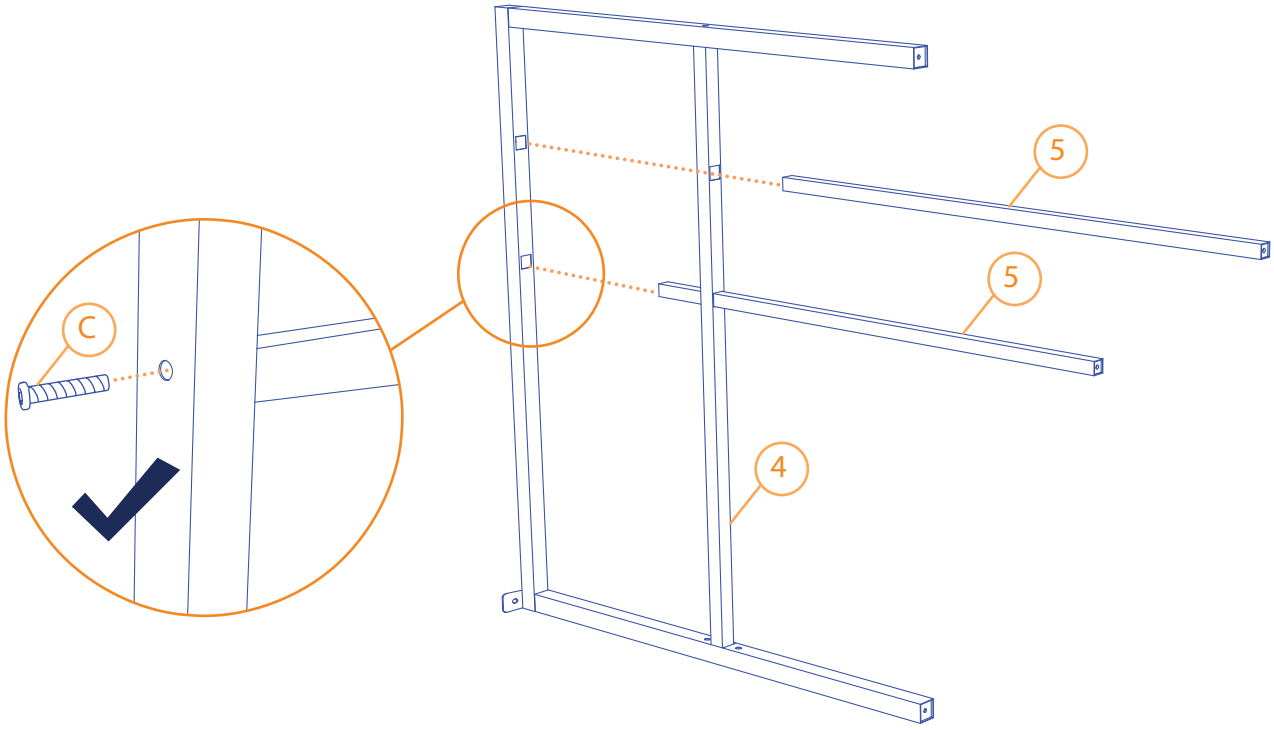

5

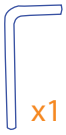

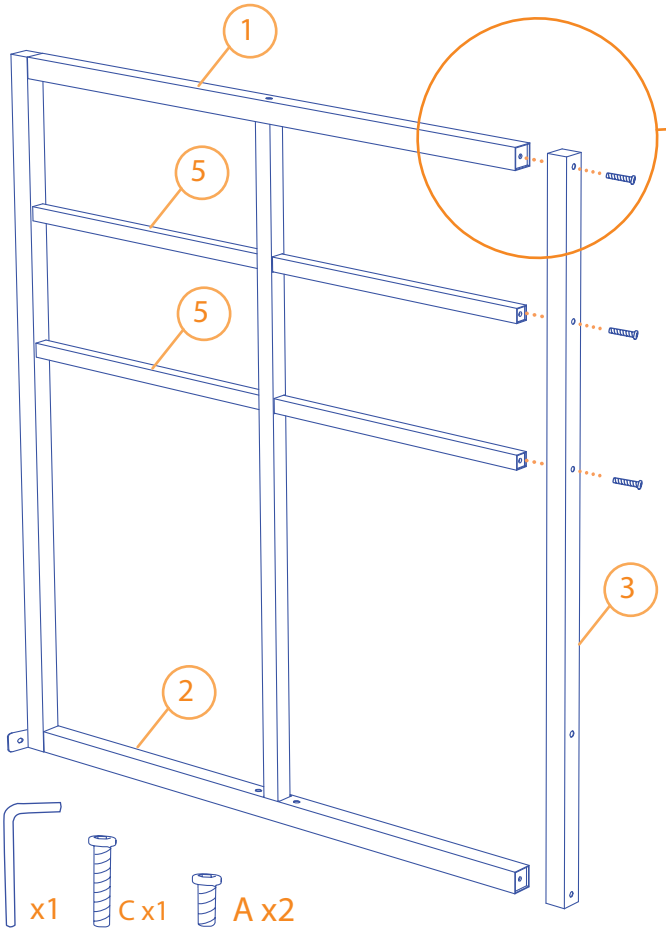

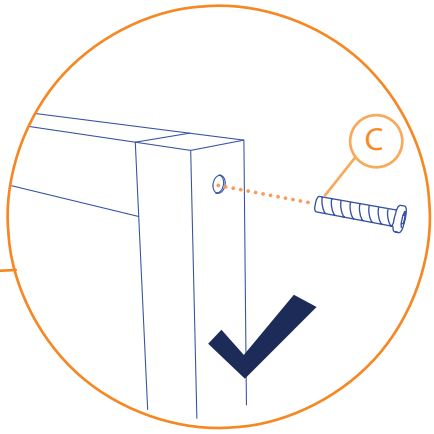

6

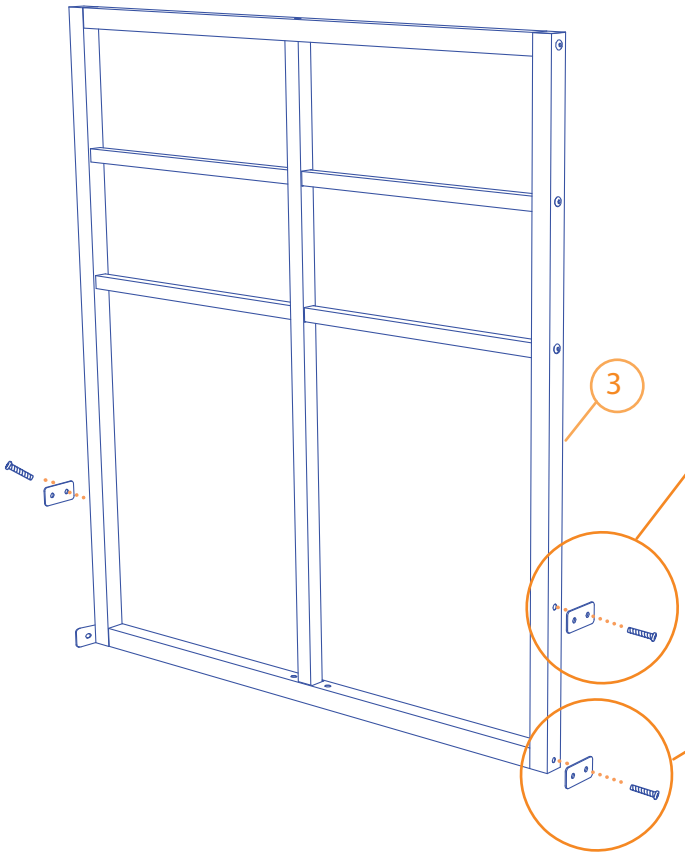

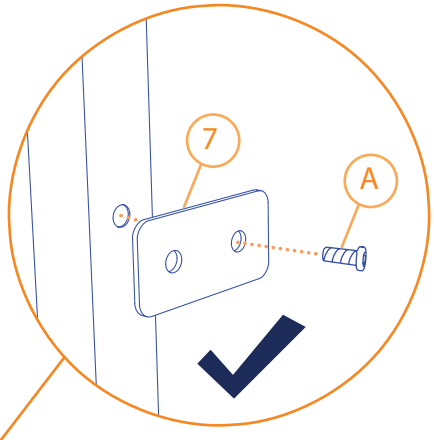

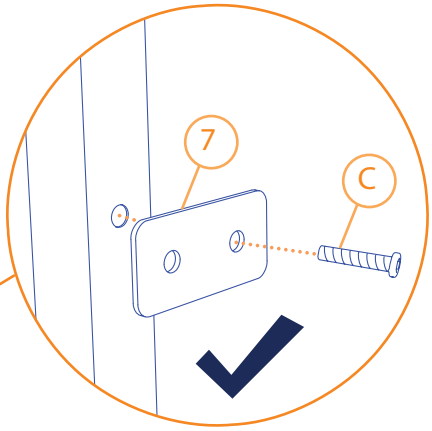

7

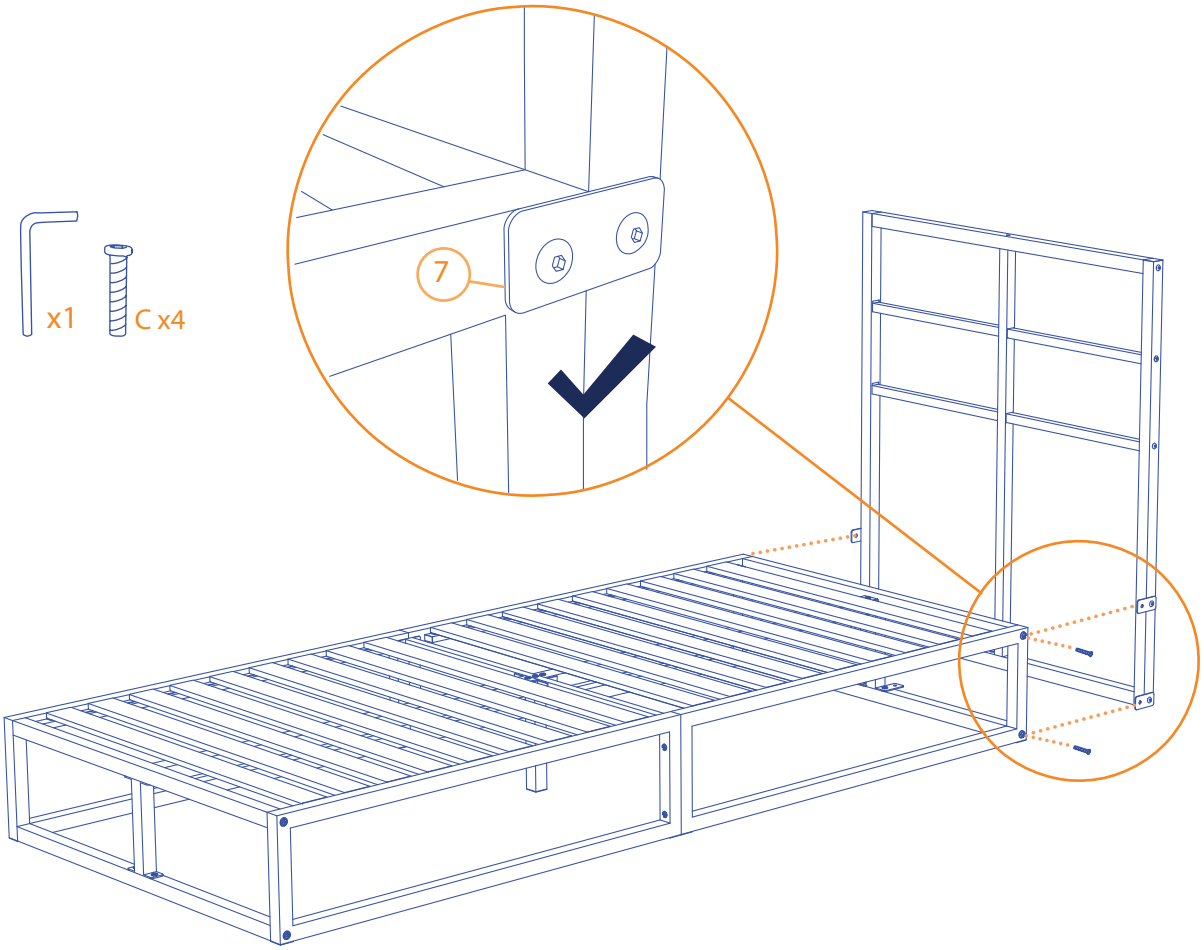

8

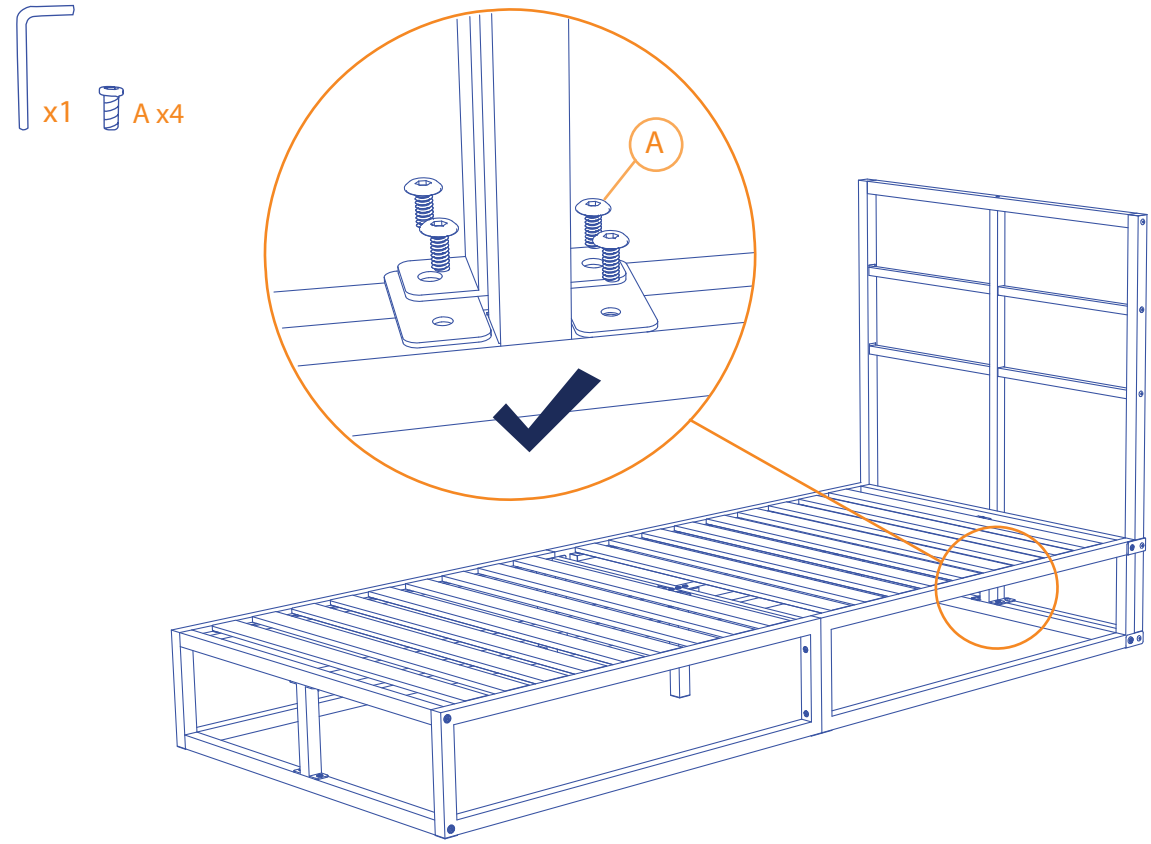

9

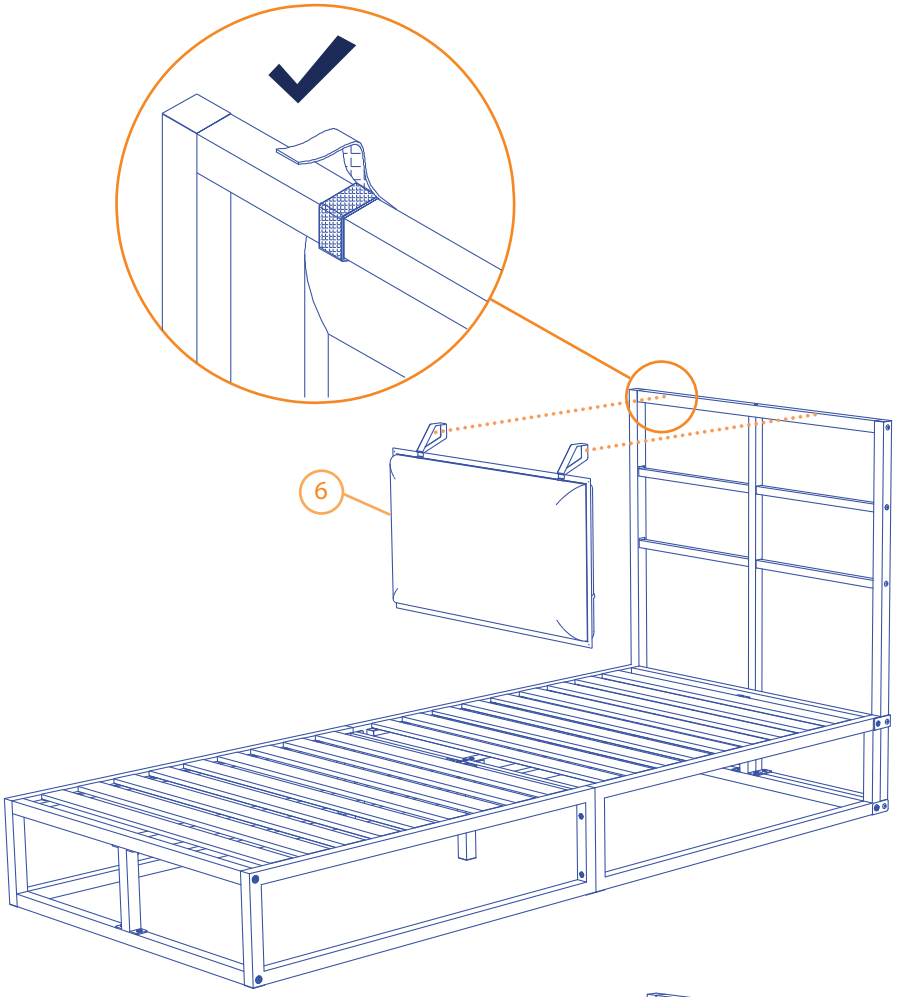

10

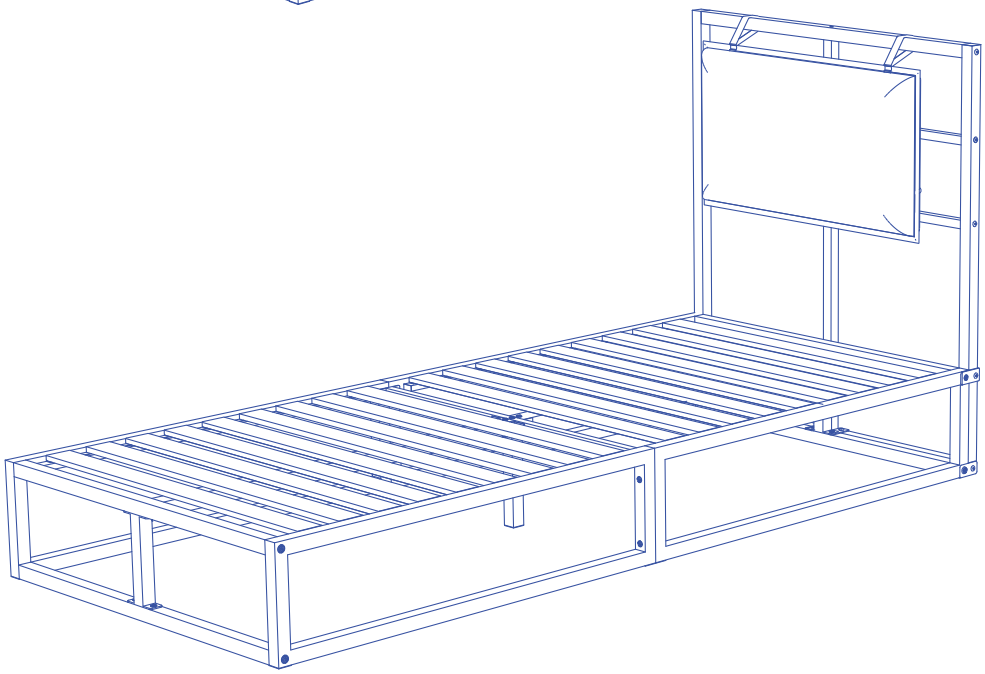

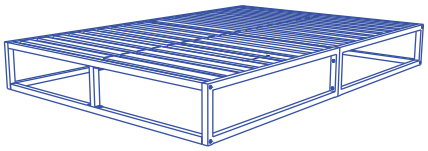

107 x 203 cm/122 x 183 cm/138 x 188 cm
135 x 190 cm/140 x 200 cm/150 x 190 cm
150 x 200 cm /153 x 203 cm/160 x 190 cm
160 x 200cm

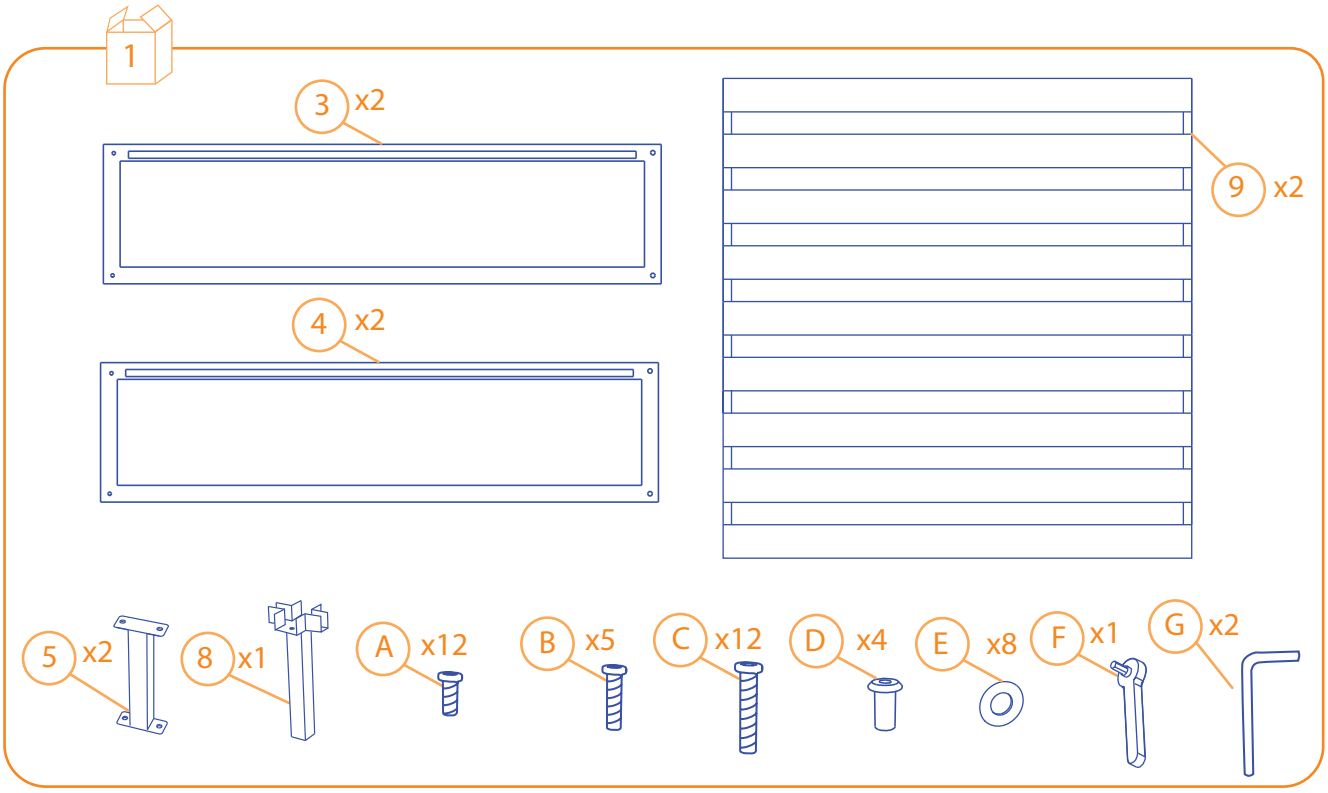

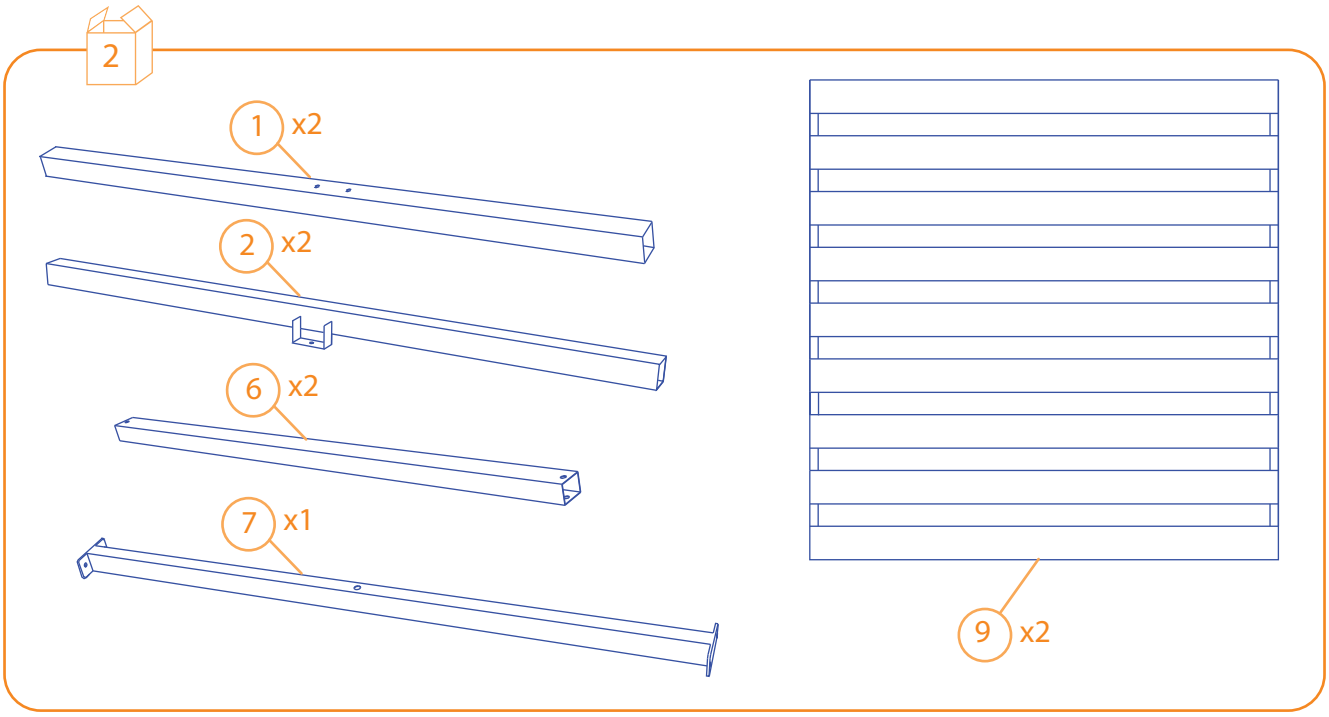

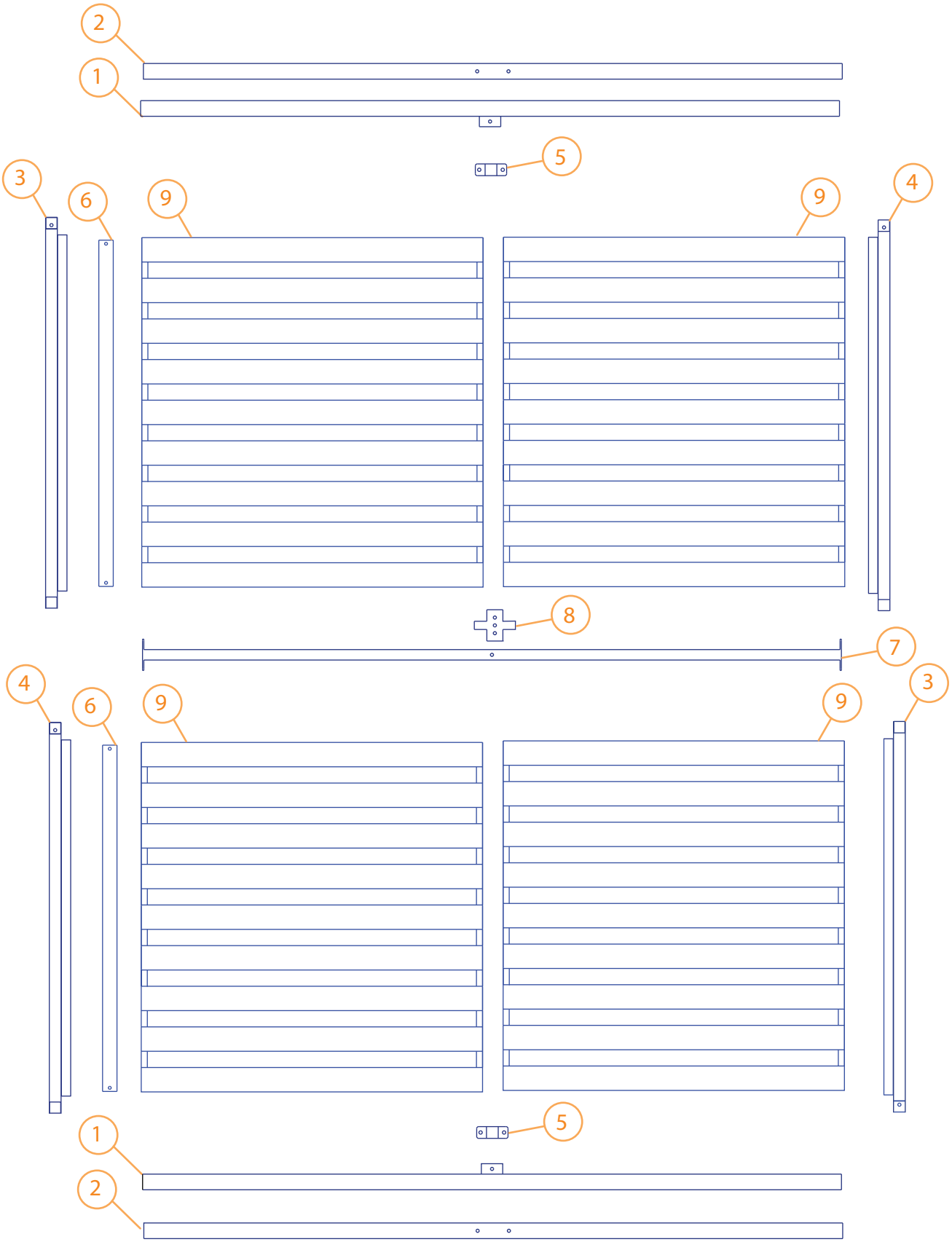
2
1
5
3
6
9
9
4
8
7
4
6
9
9
3
5
1
2

1

C x2 D x2

x2

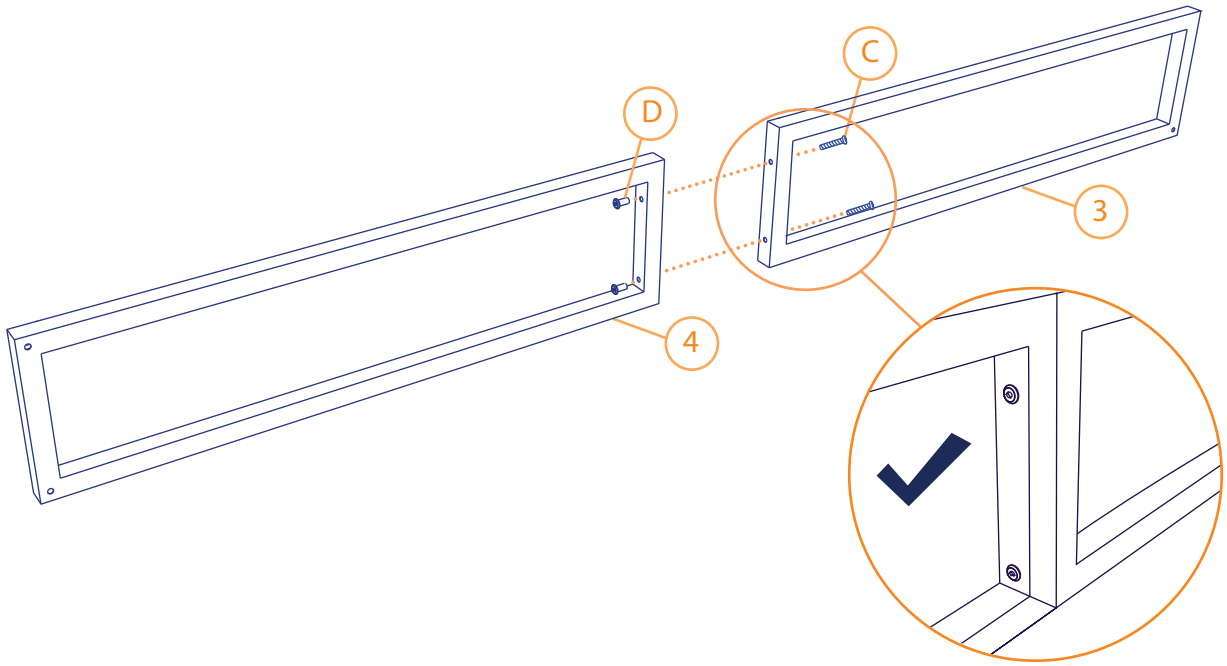

2

A x4

x2

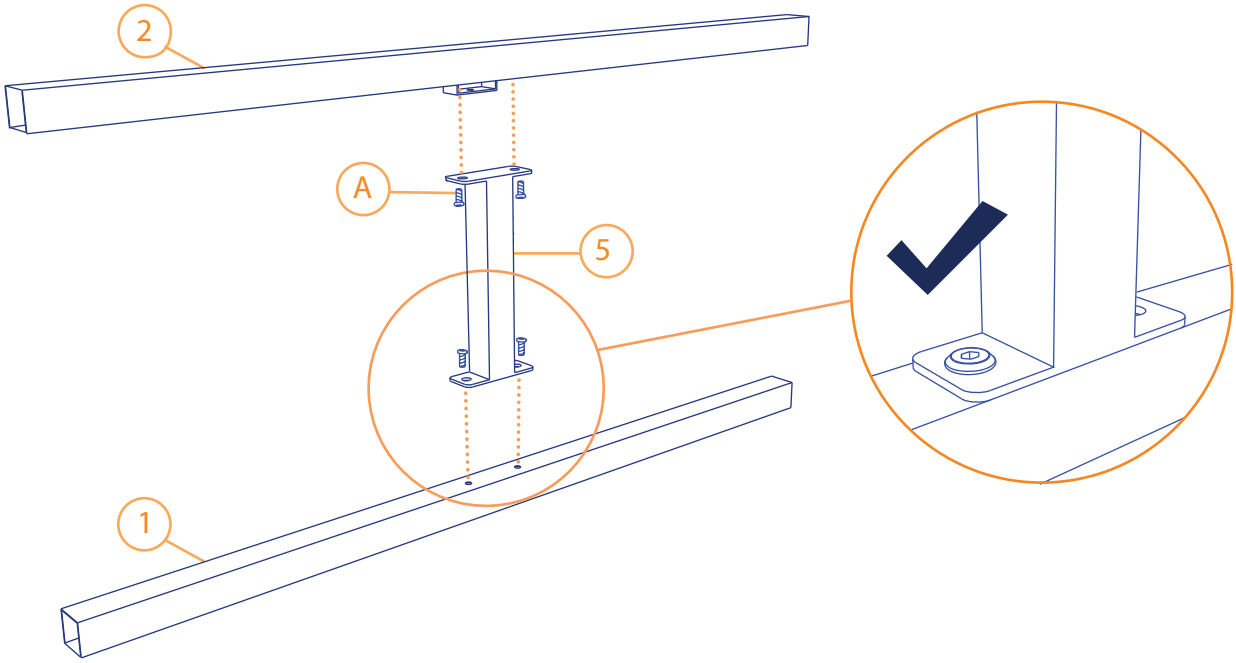

3

C x2 E x2

x2

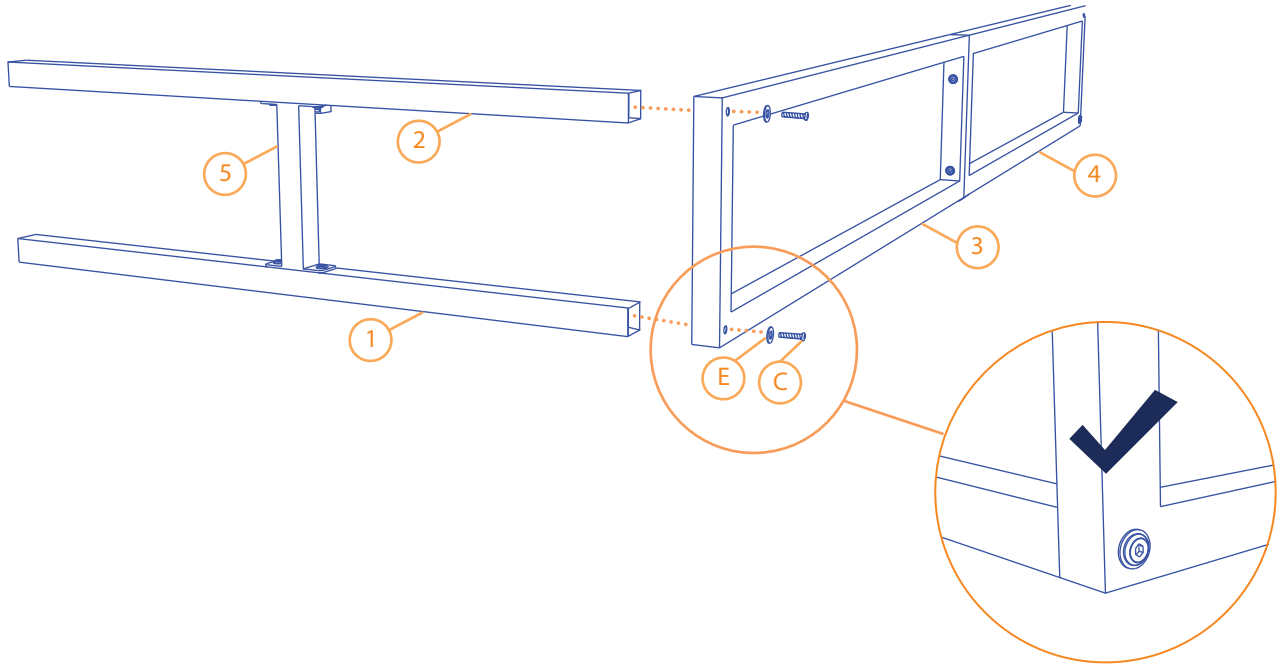

4

C x4 E x4

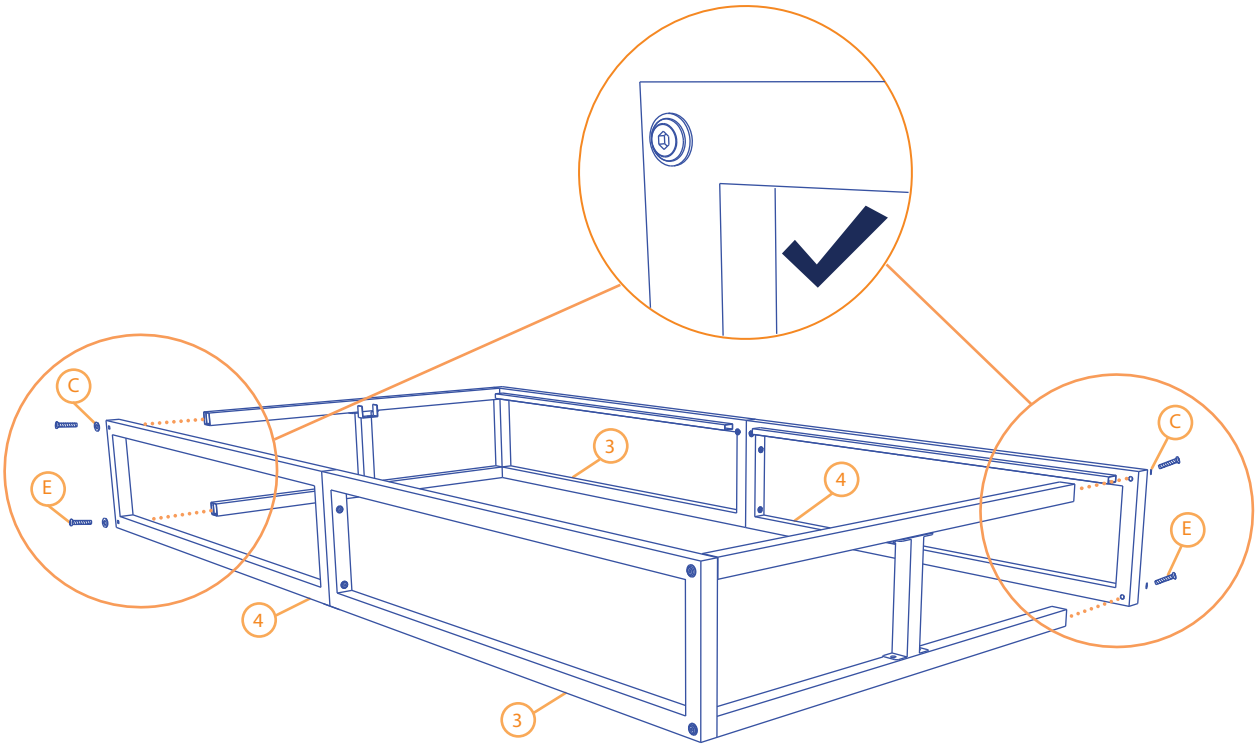

5

A x4 B x1

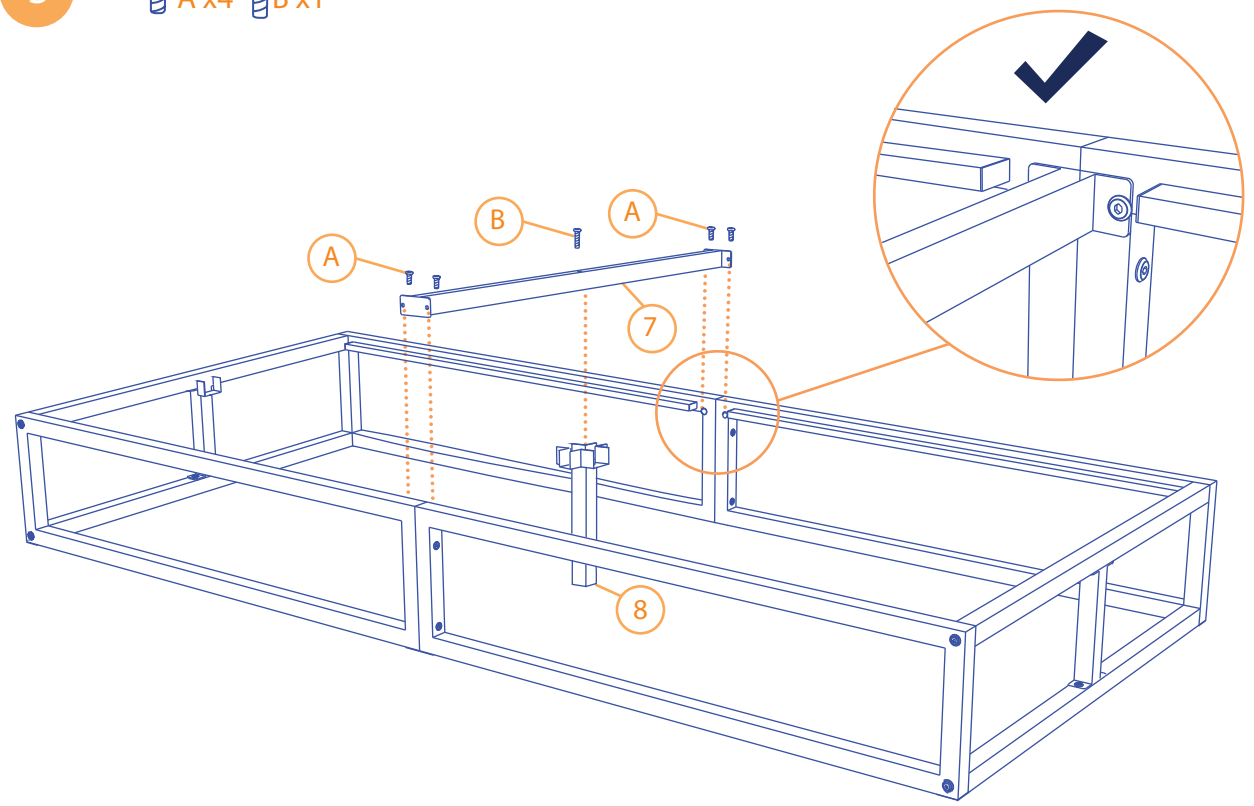

6

B x4

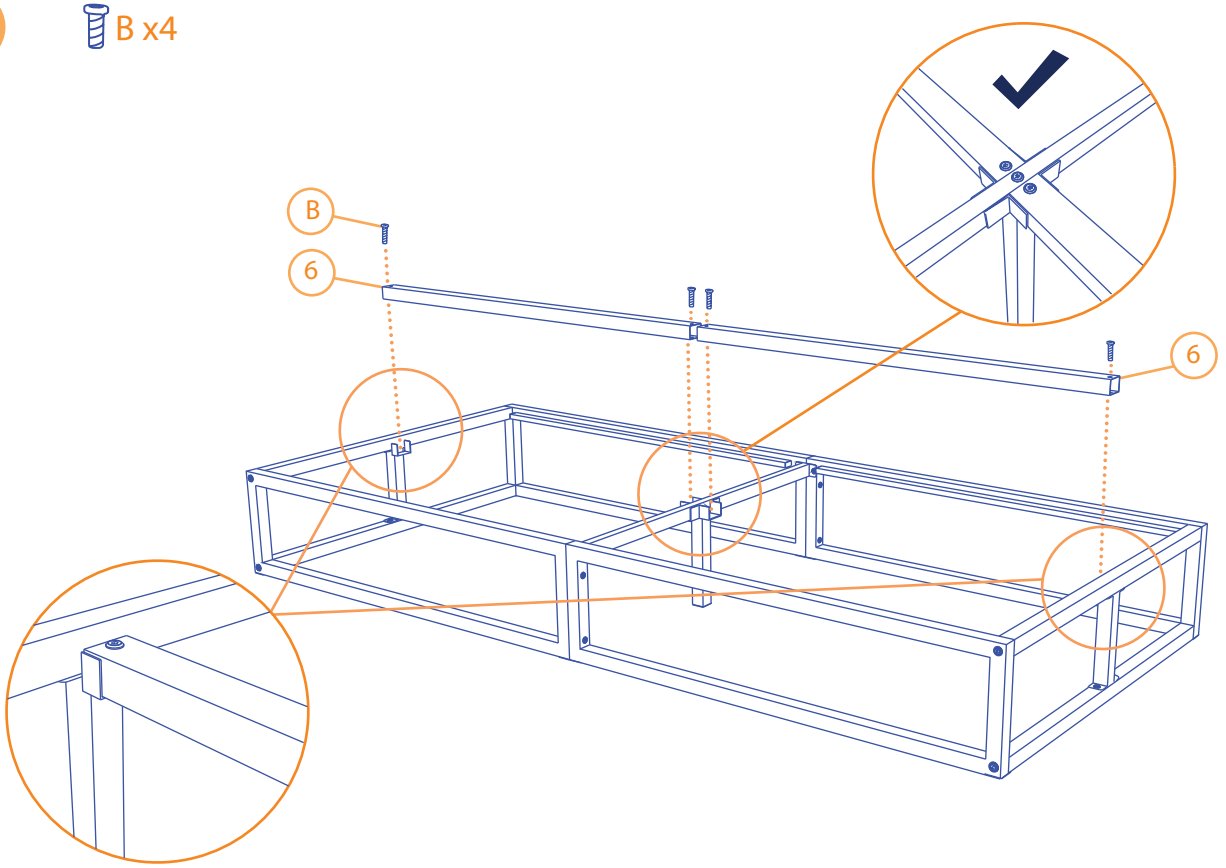

7

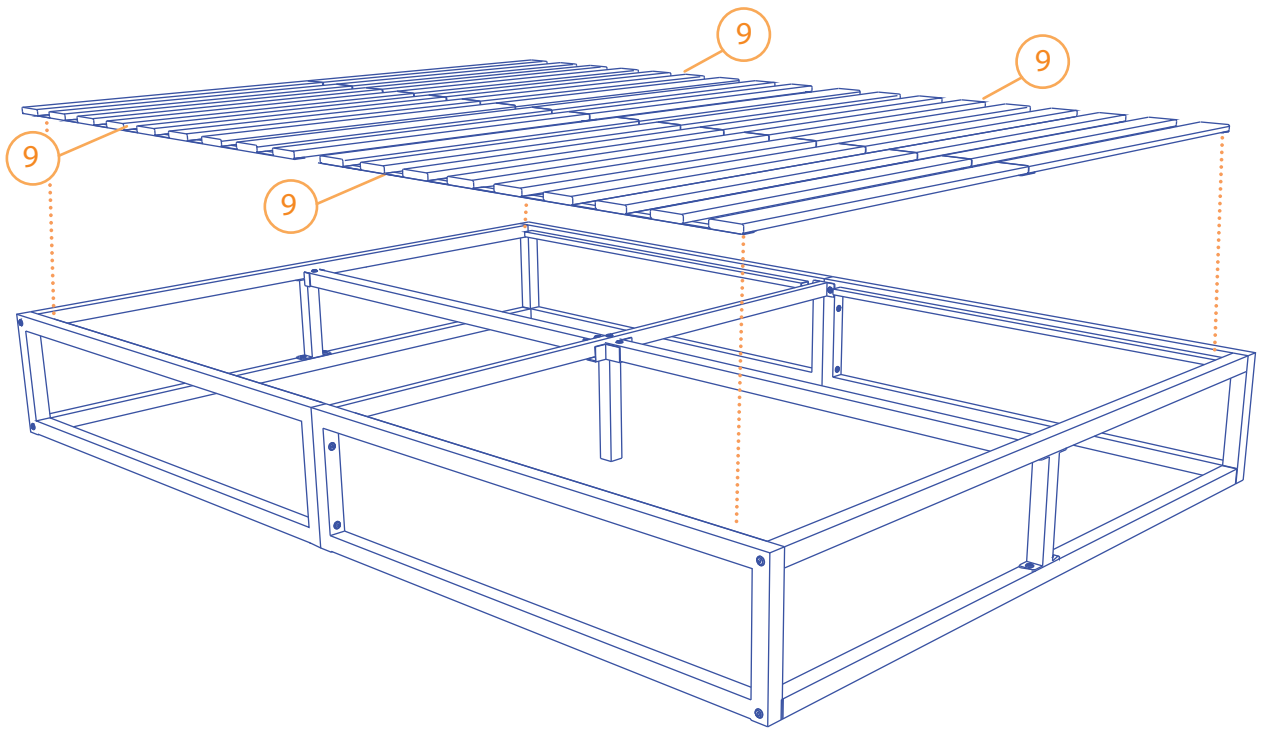

8

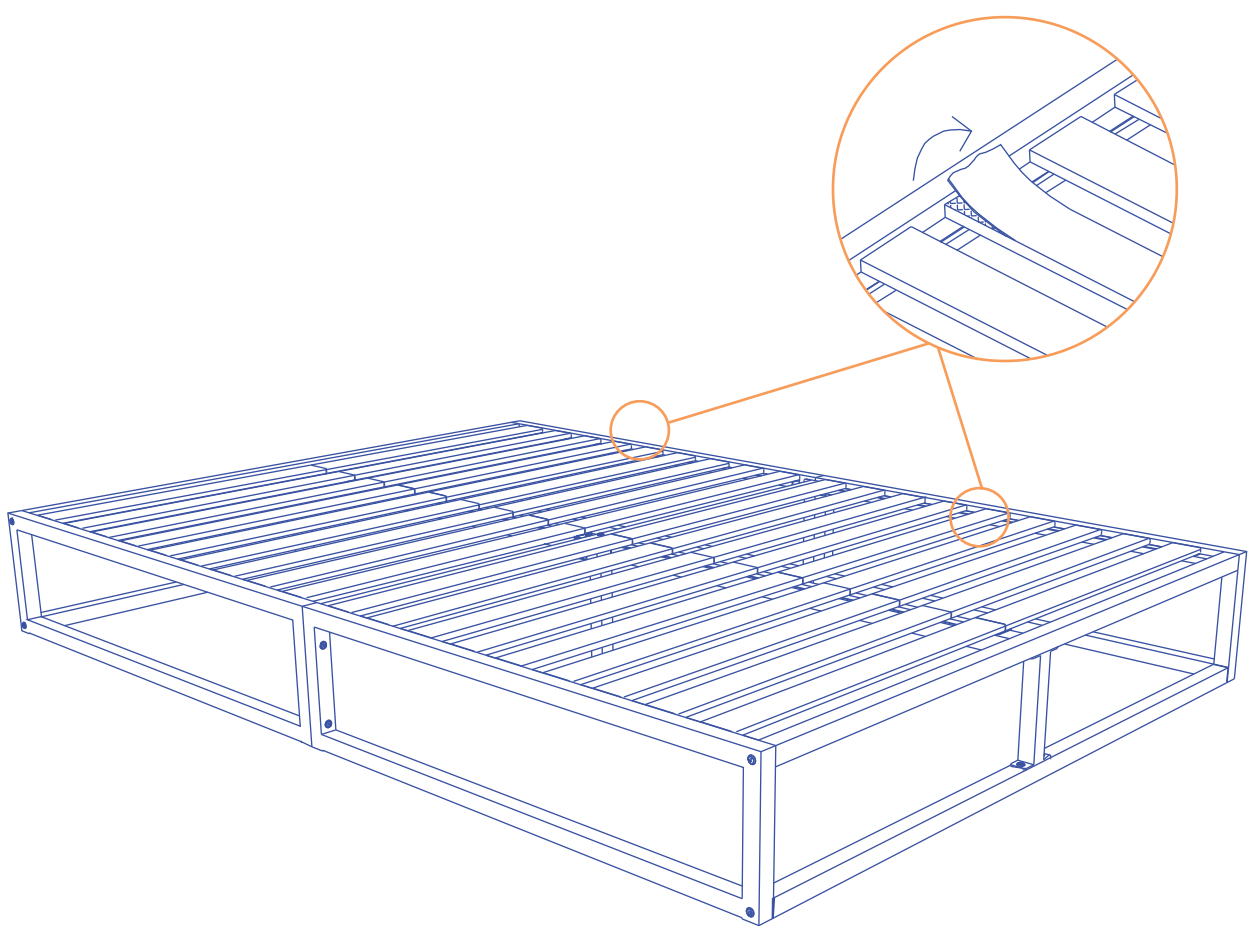

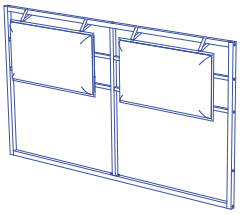

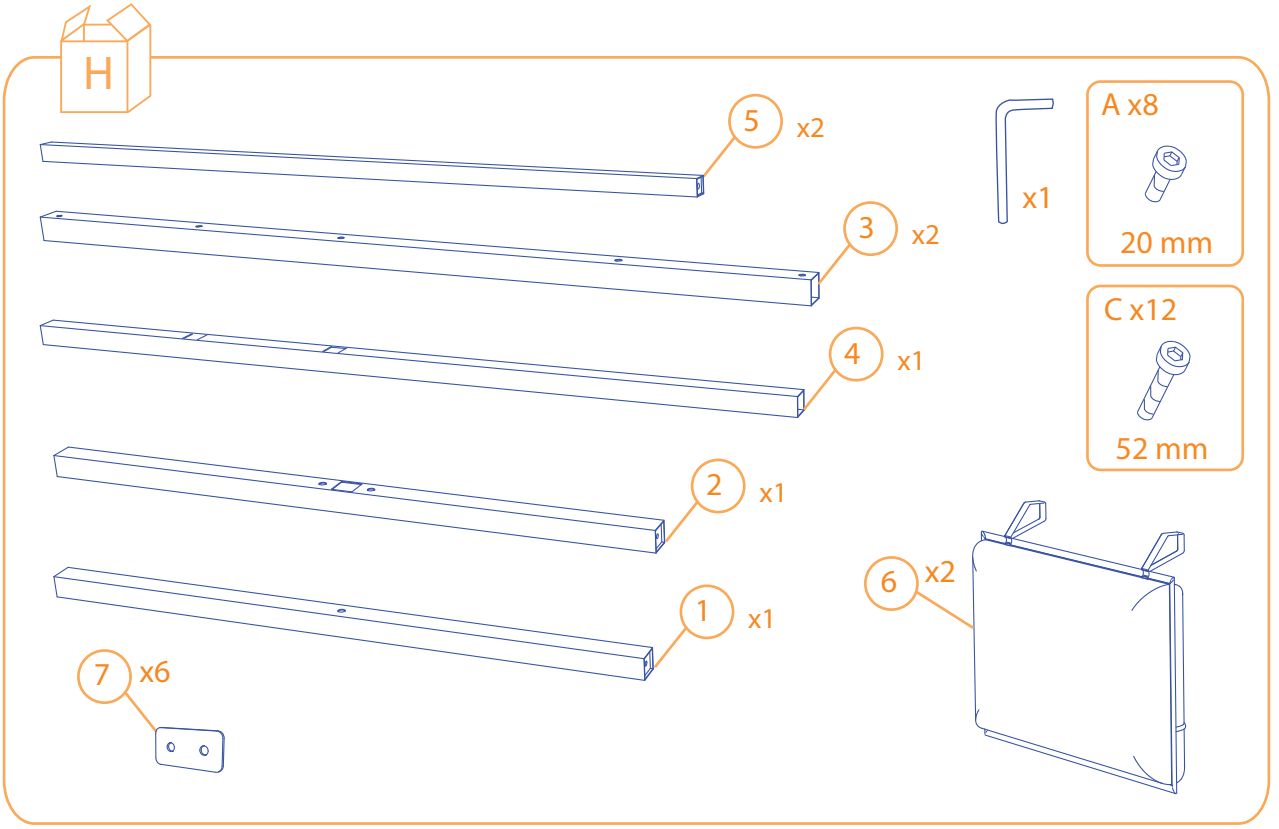
H
5 x2
3 x2
4 x1
2 x1
1 x1
7 x6
6 x2
x1
A x8
20 mm
C x12
52 mm

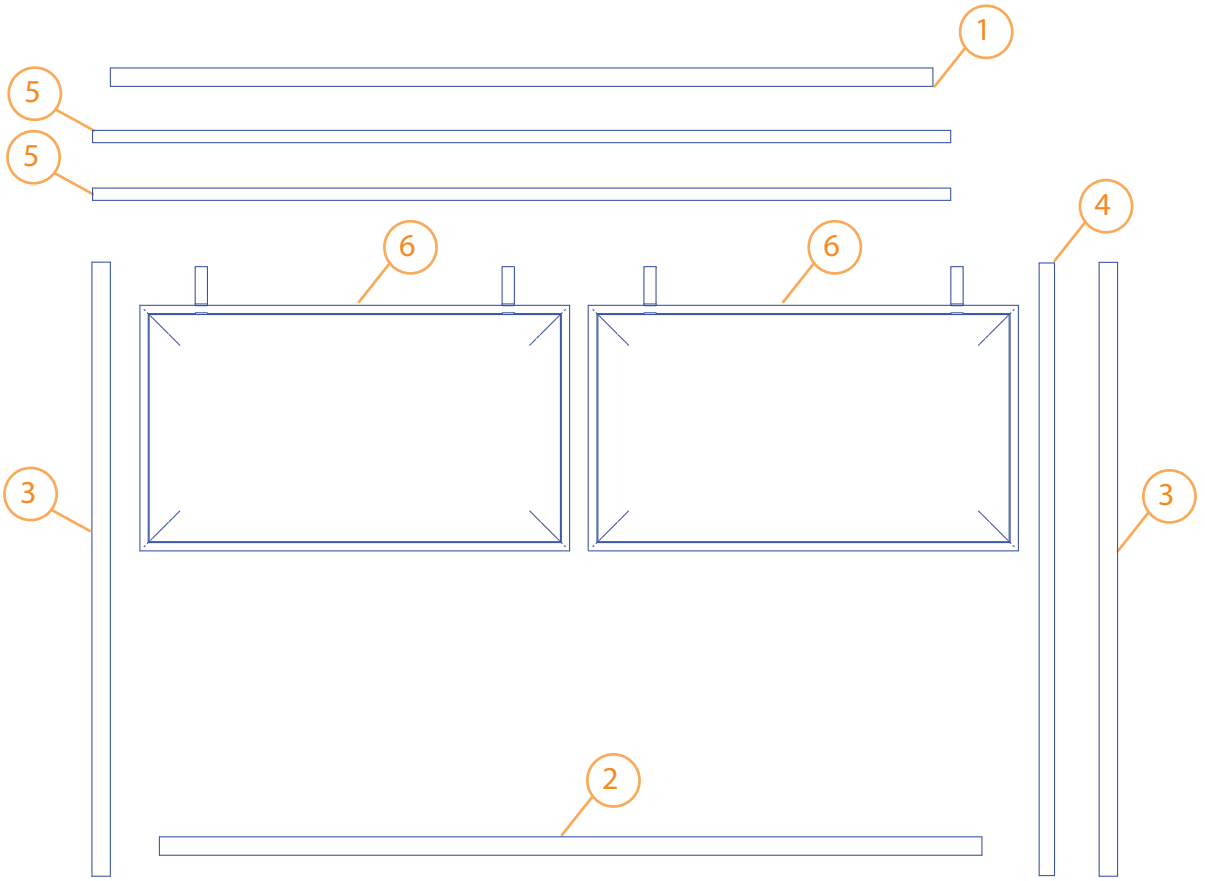
1
5
5
4
6
6
3
3
2

1

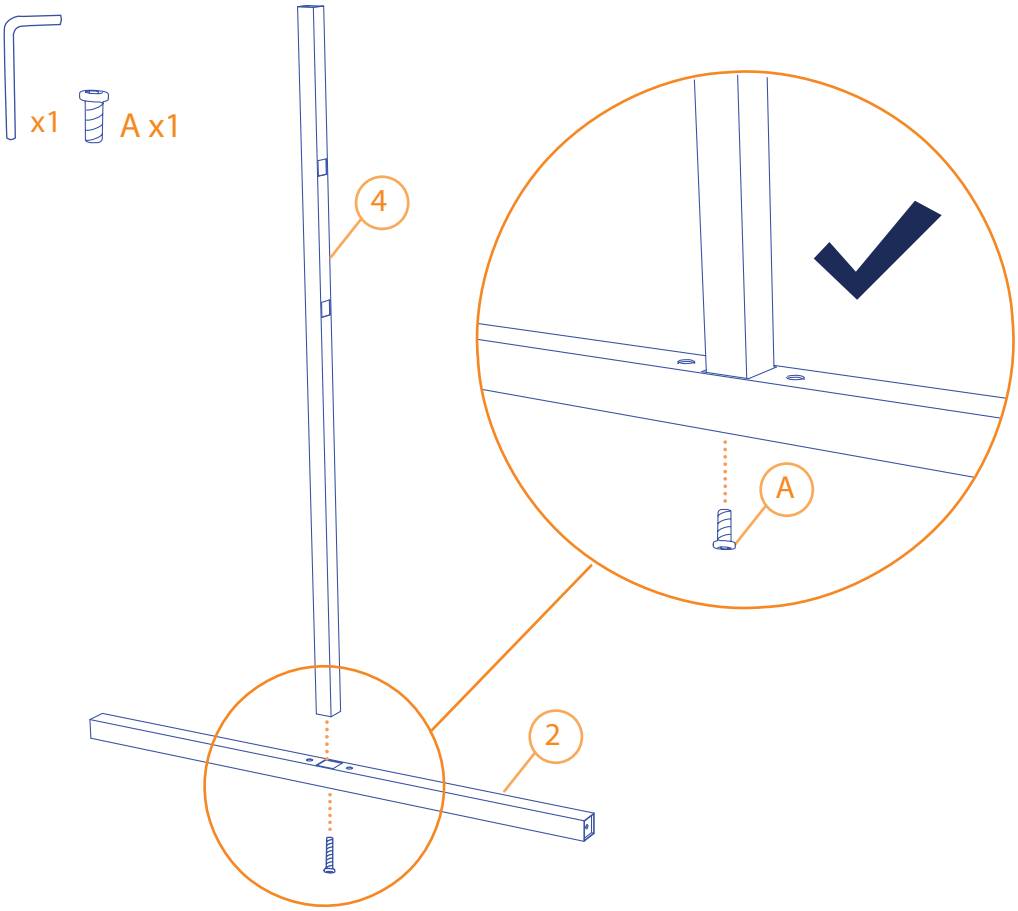

2

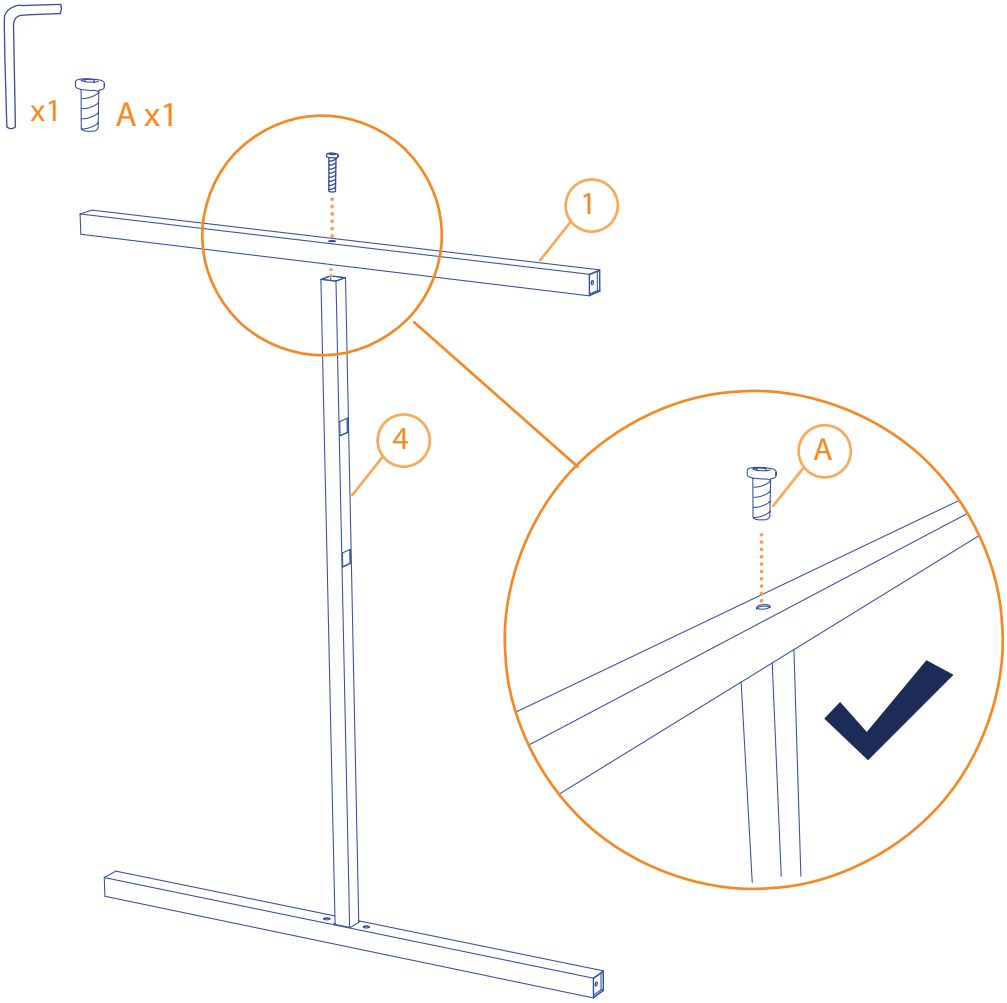

3

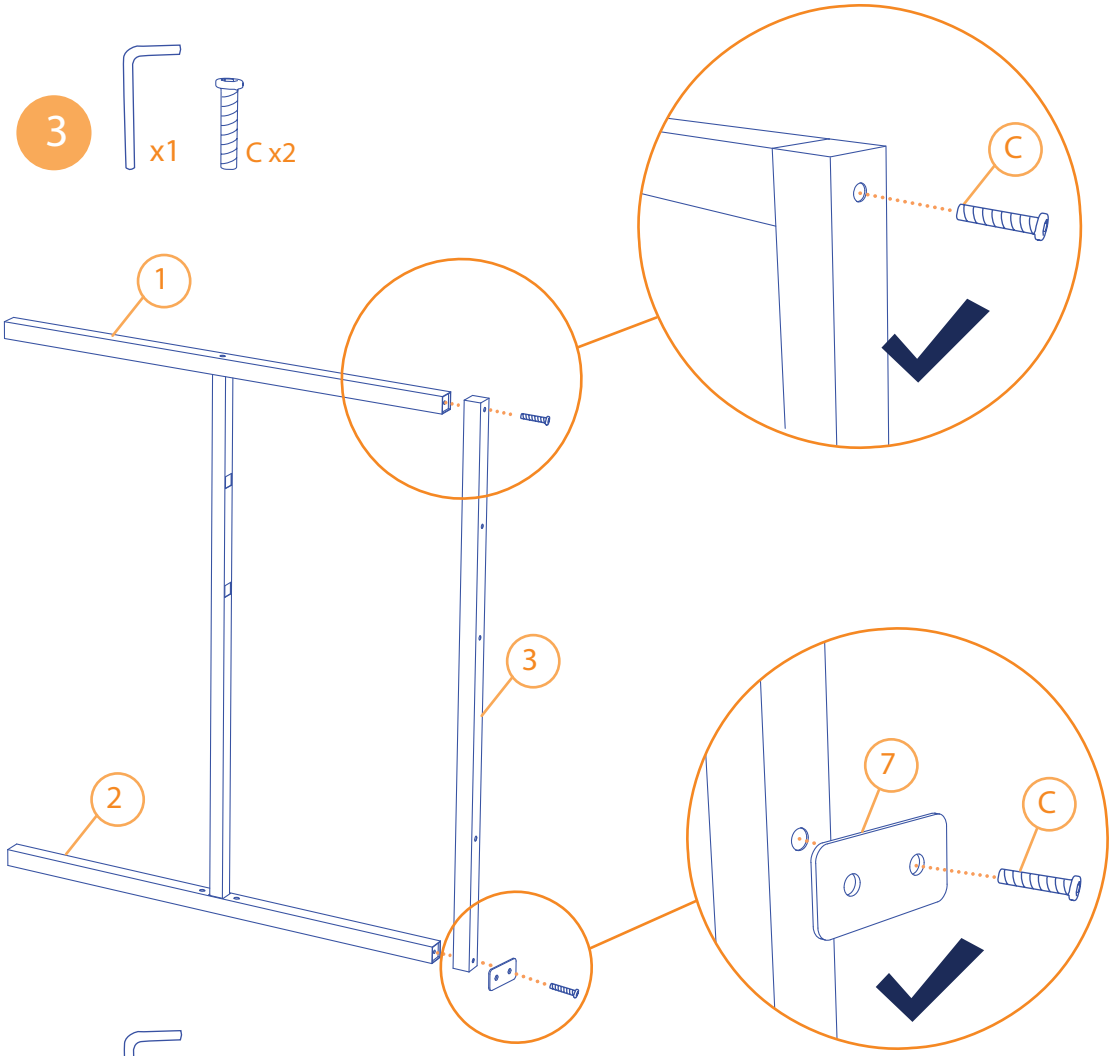

4

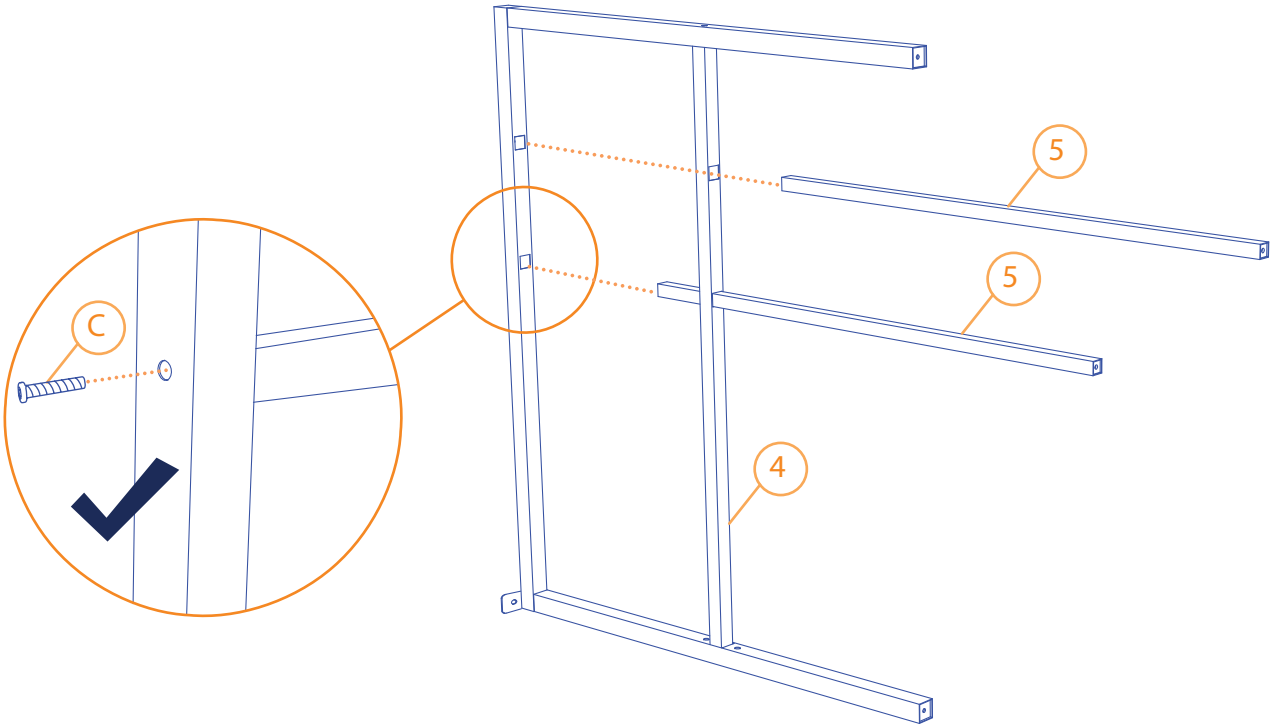

5

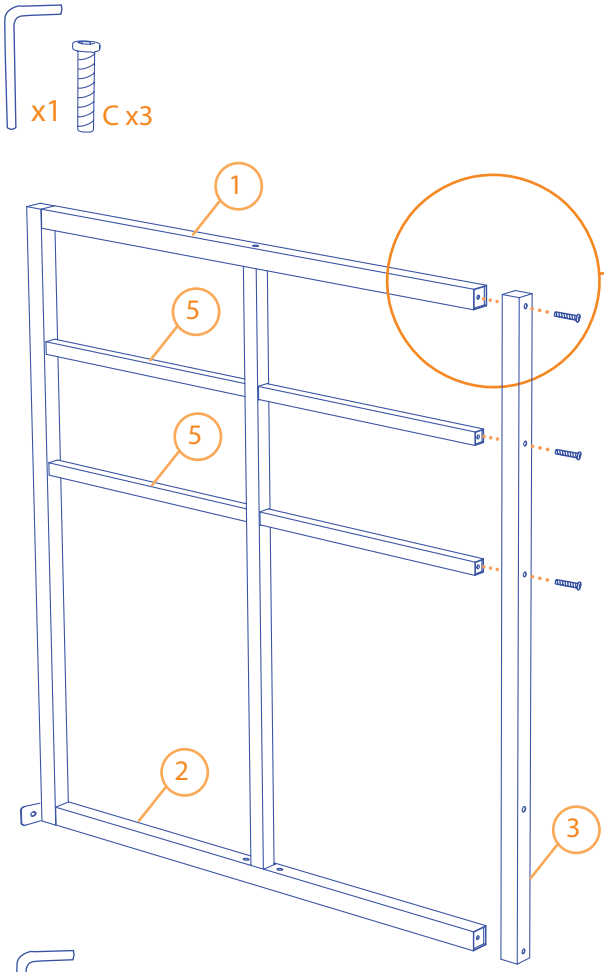

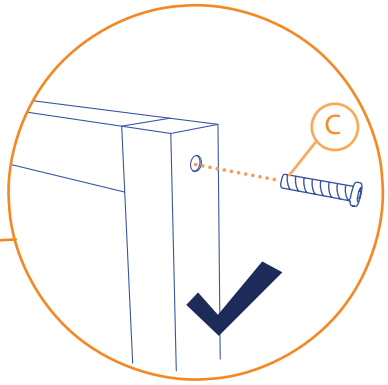

6

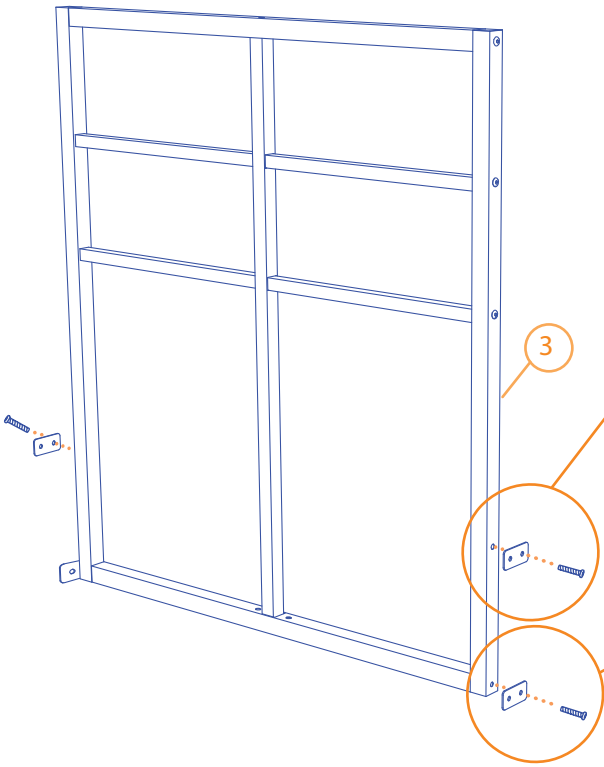

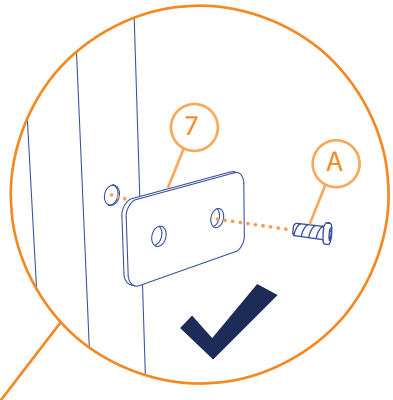

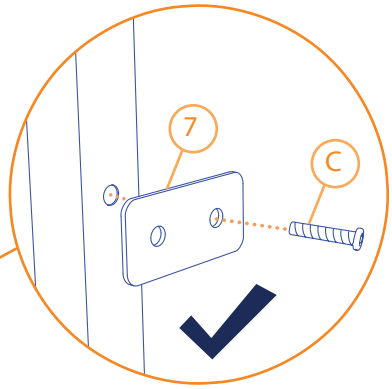

7

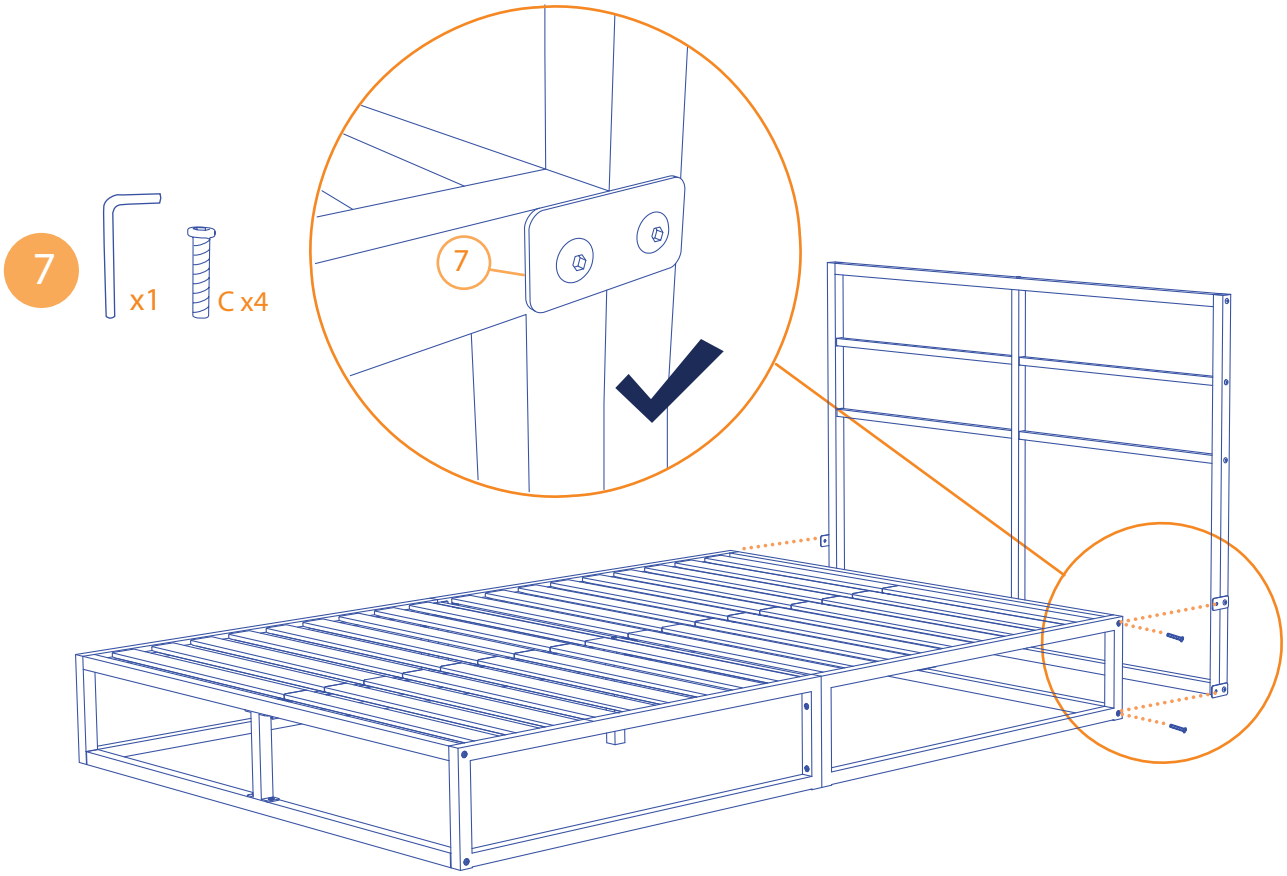

8

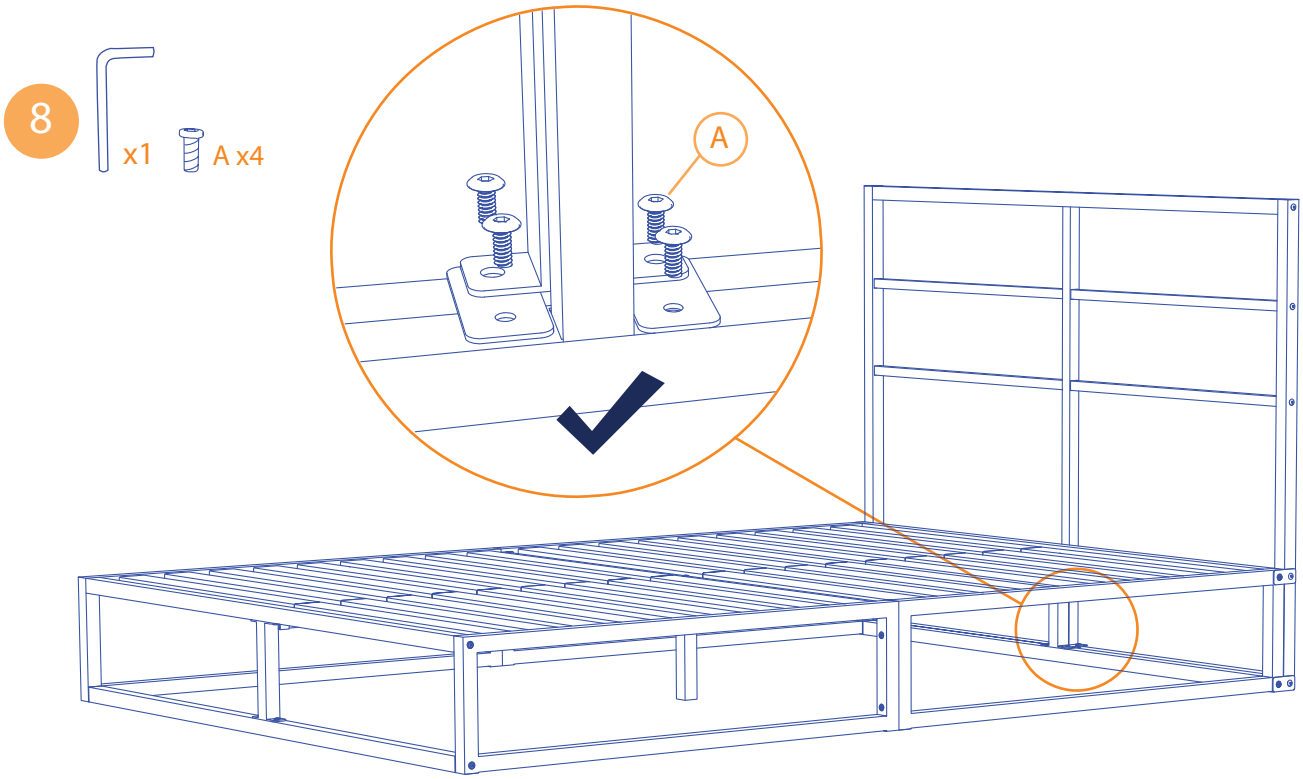

9

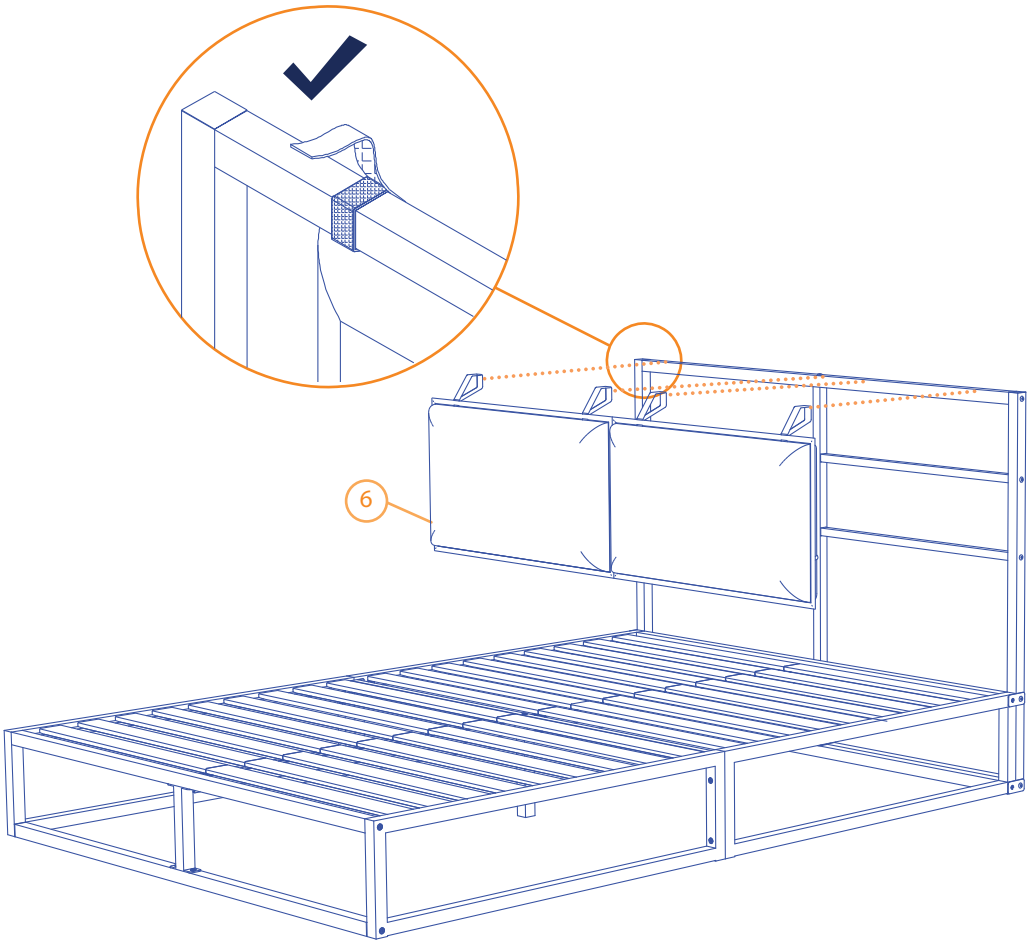

10

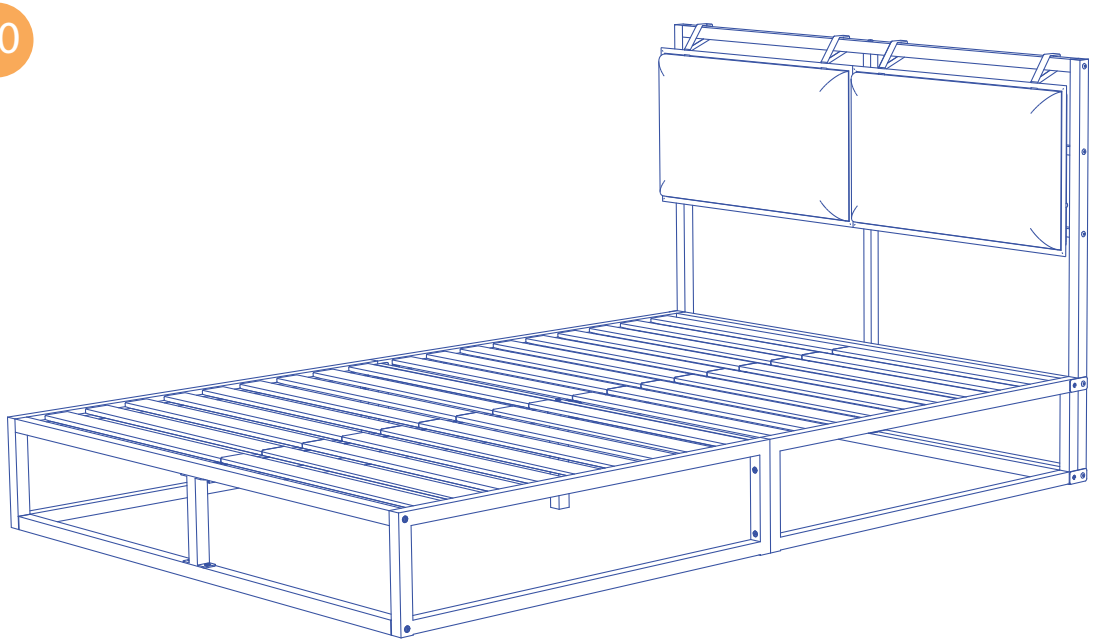

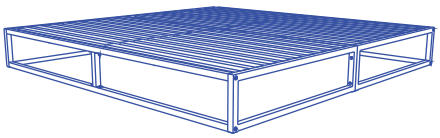

180 x 200 cm/ 183 x 203 cm
200 x 190 cm/ 200 x 200 cm

1

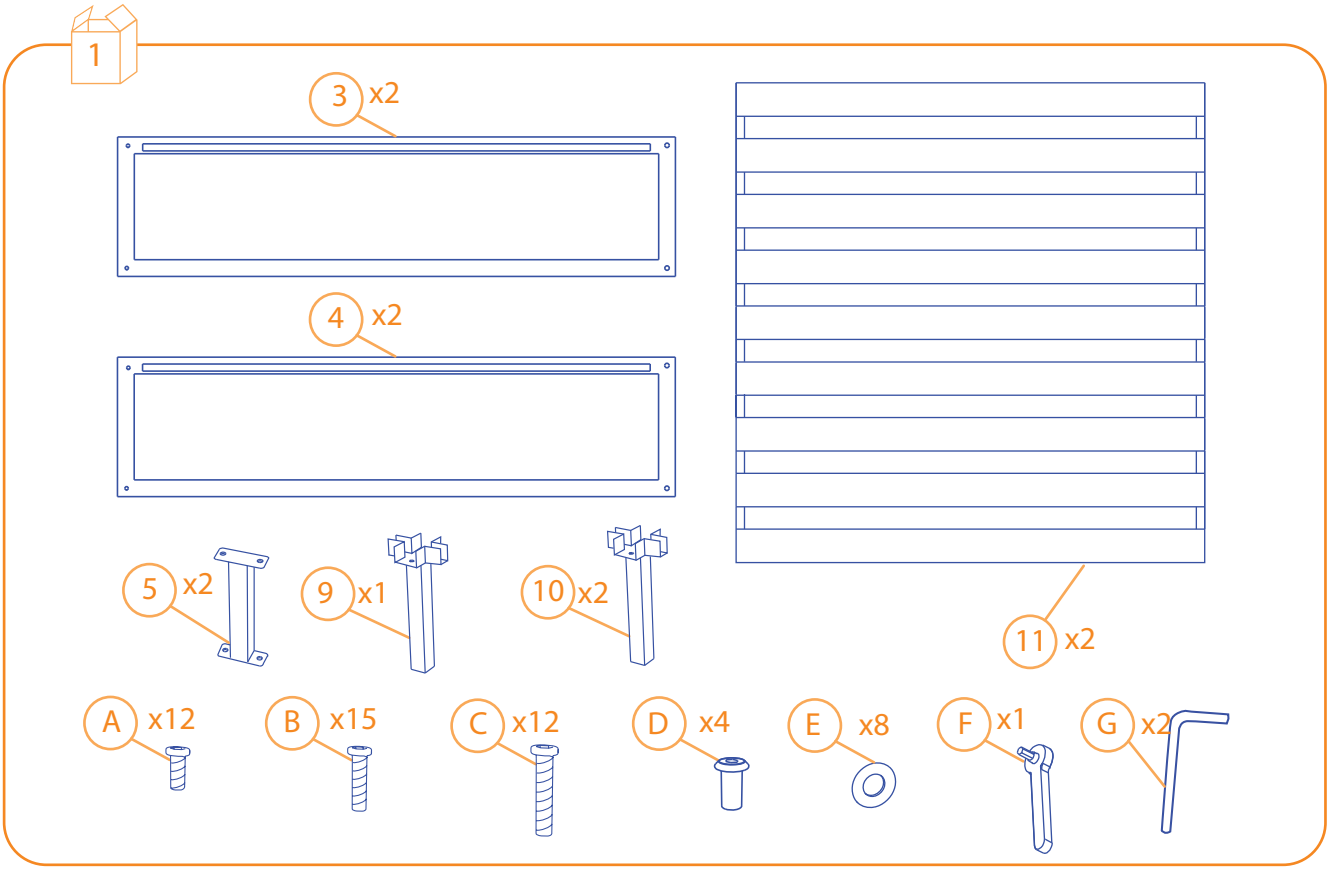

2

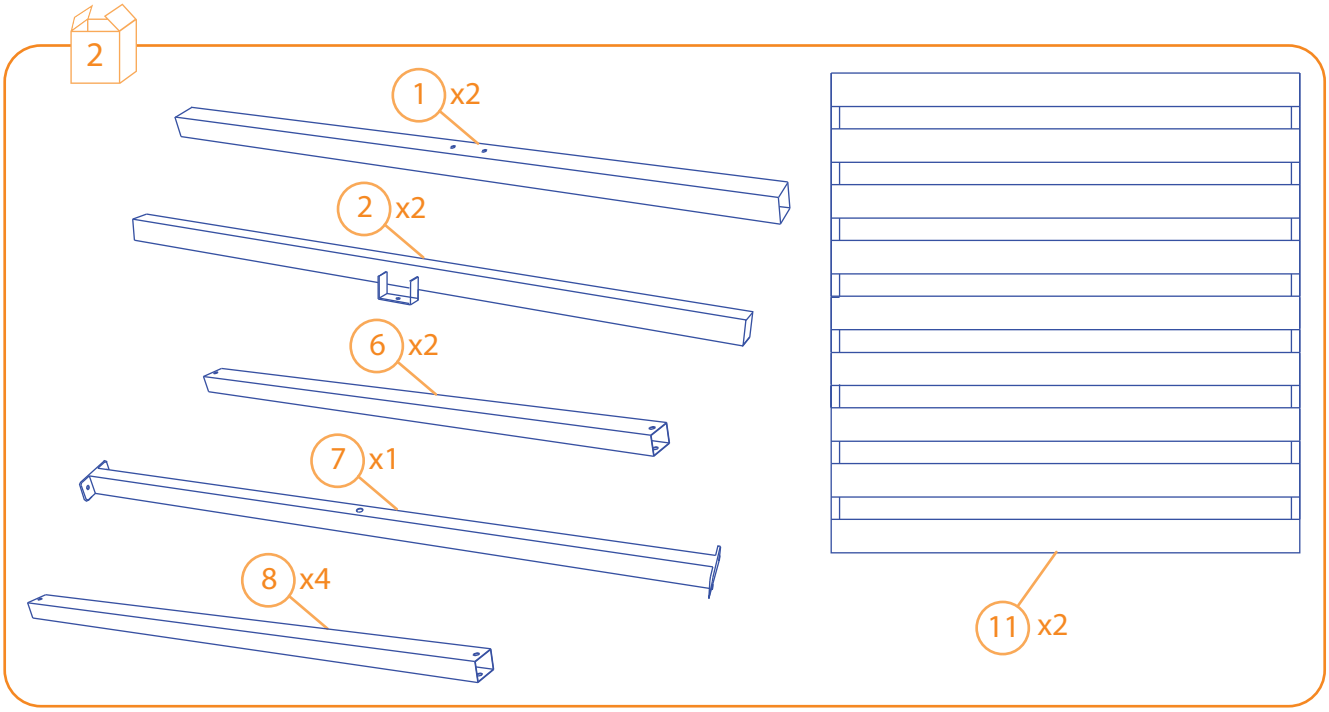

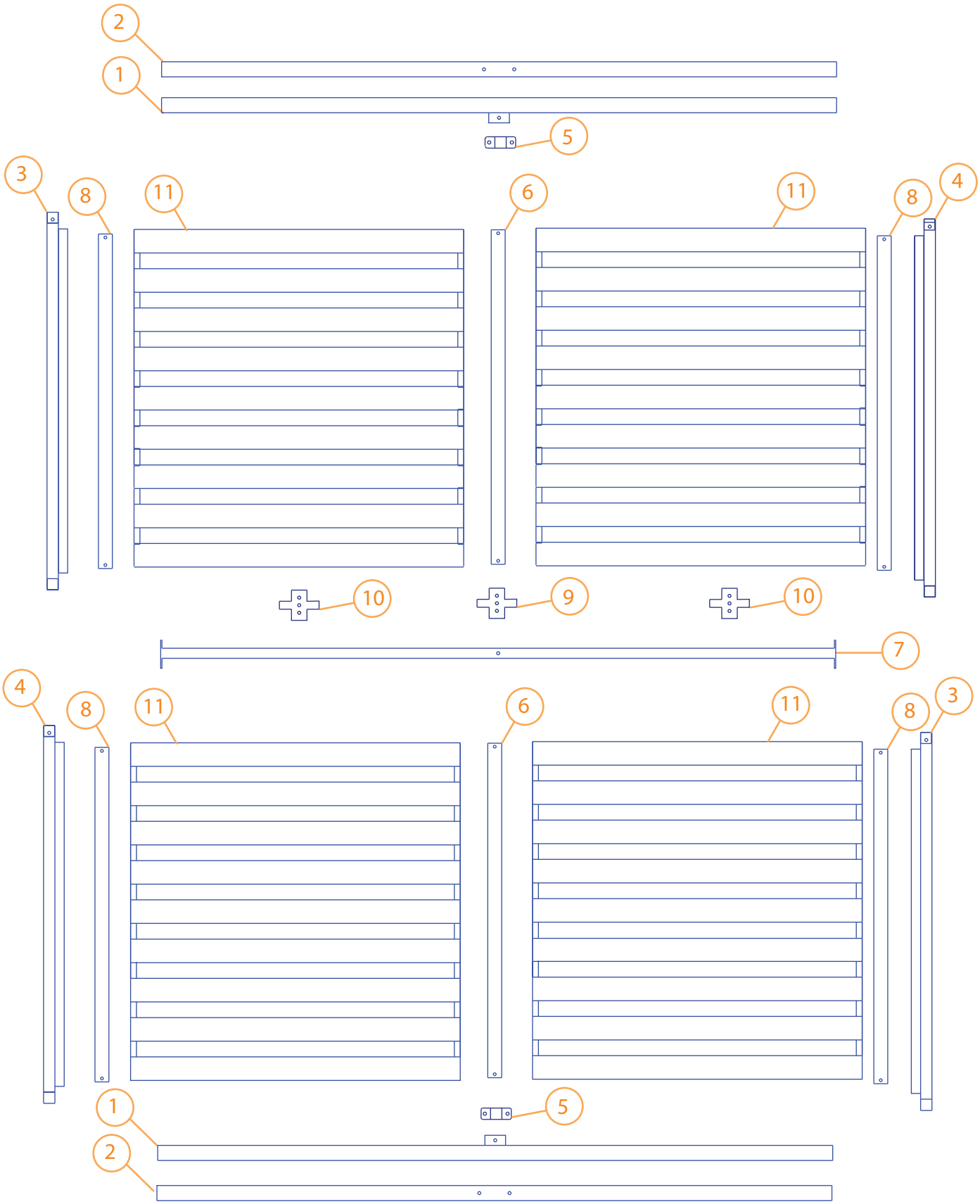
2
1
5
3
8
11
6
11
8
4
10
9
10
7
4
8
11
6
11
8
3
1
5
2

1

C x2 D x2

x2

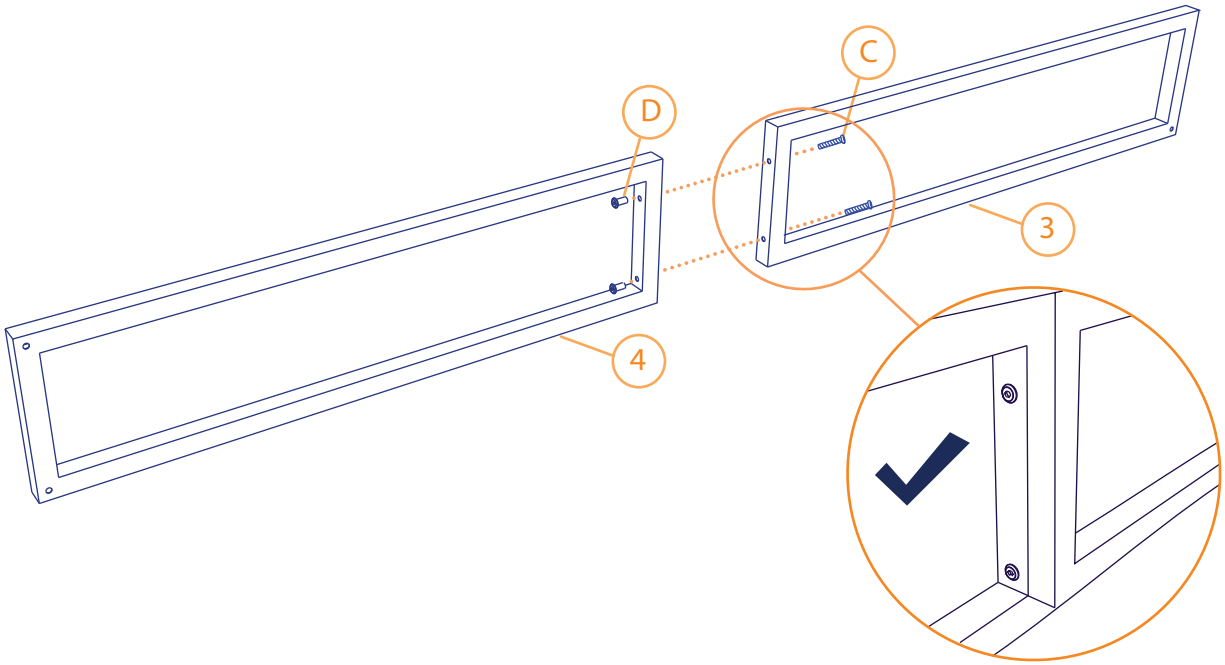

2

A x4

x2

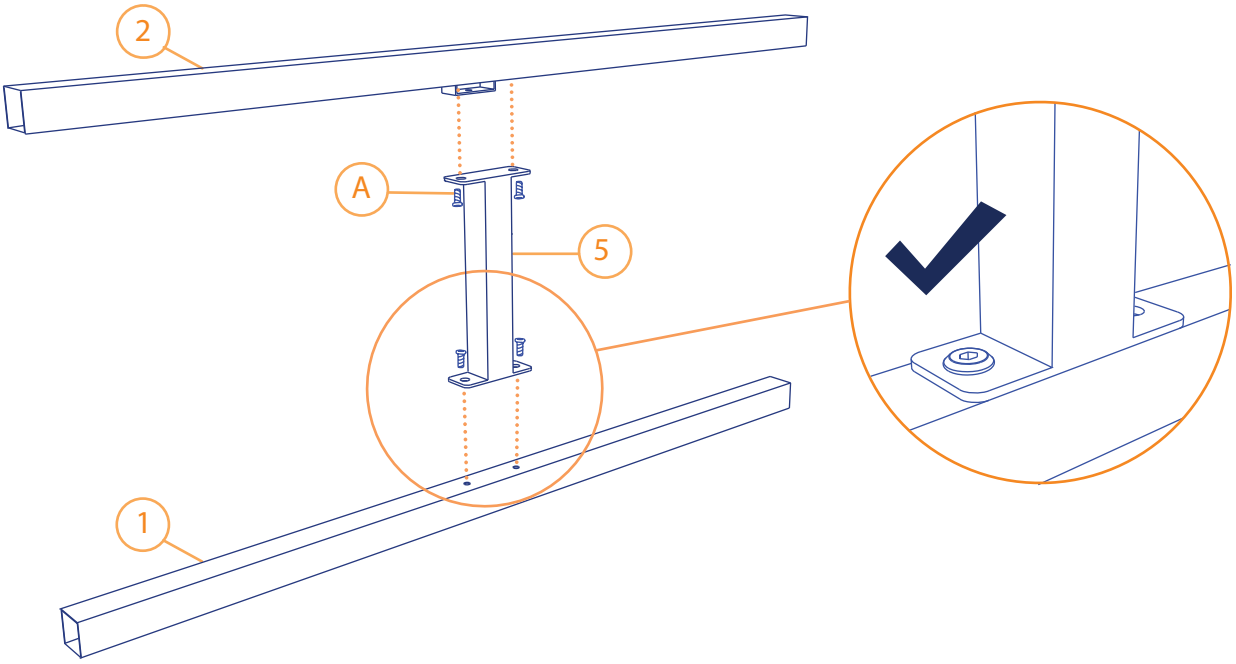

3

C x2 E x2

x2

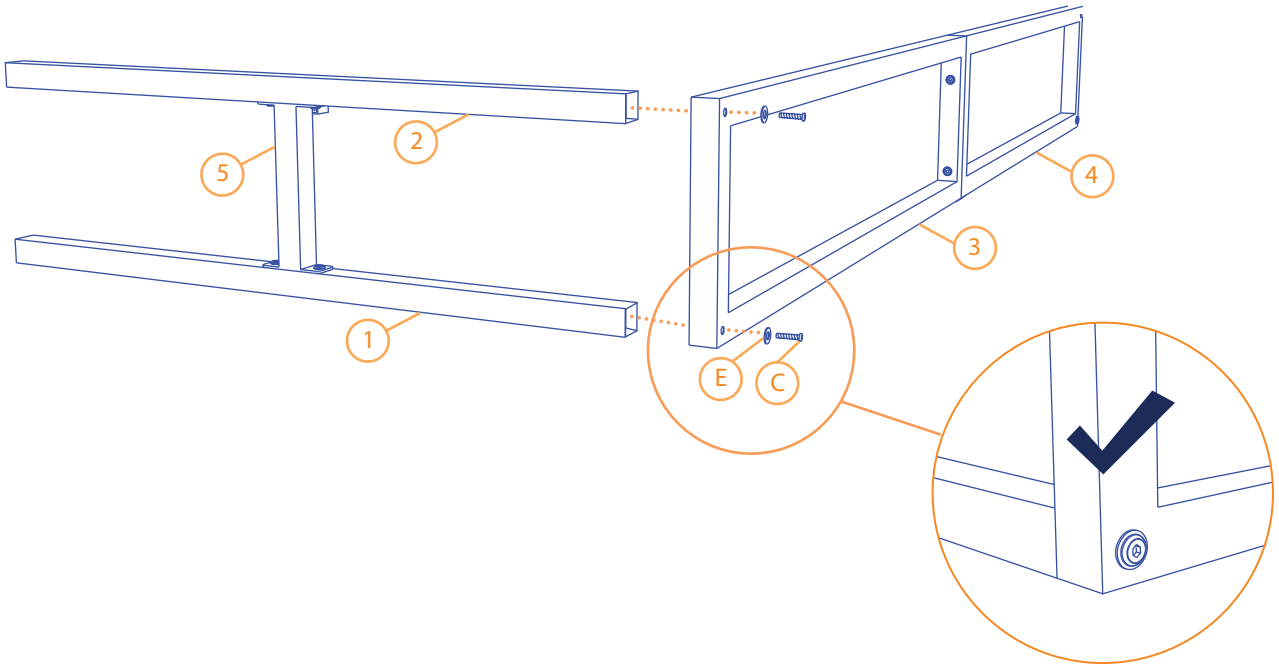

4

C x4 E x4

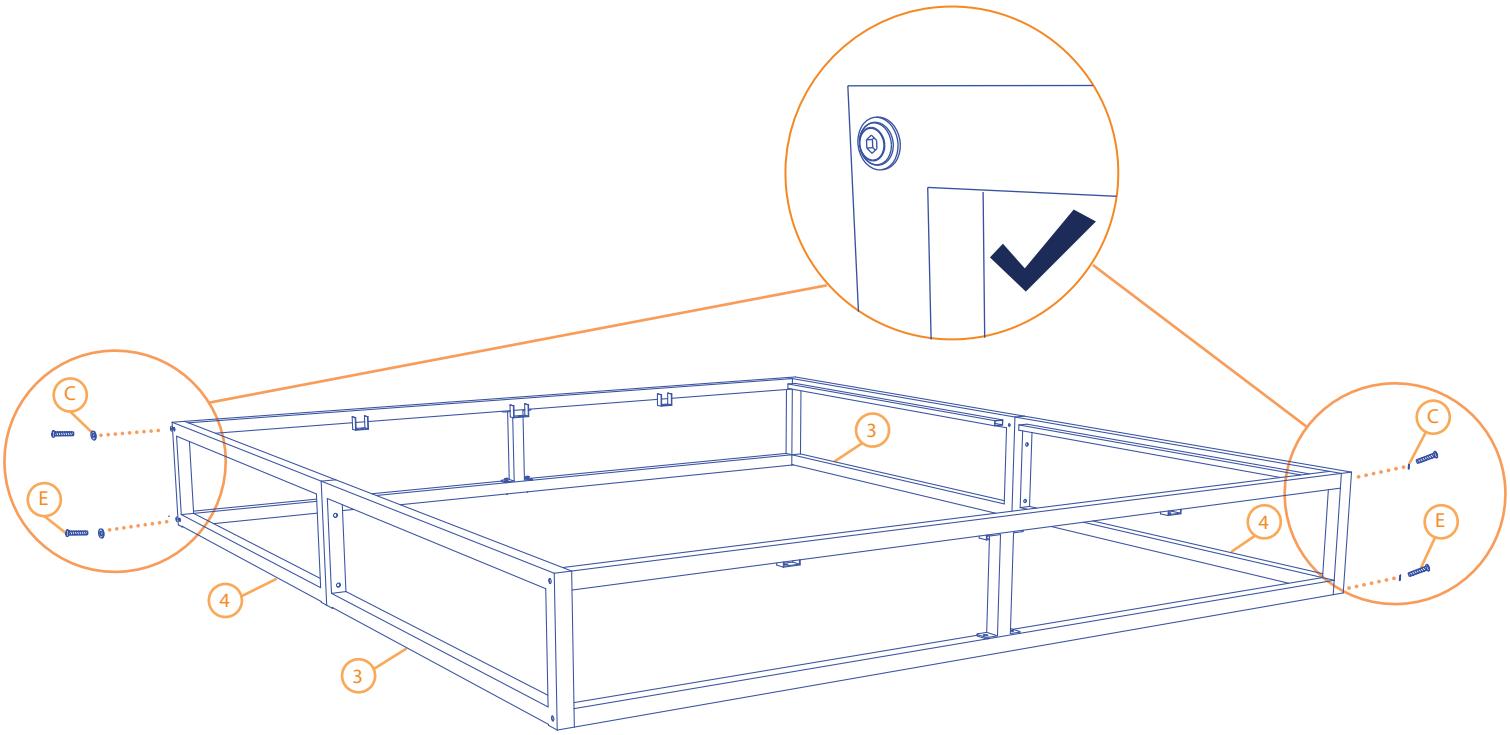

5

B x3 A x4

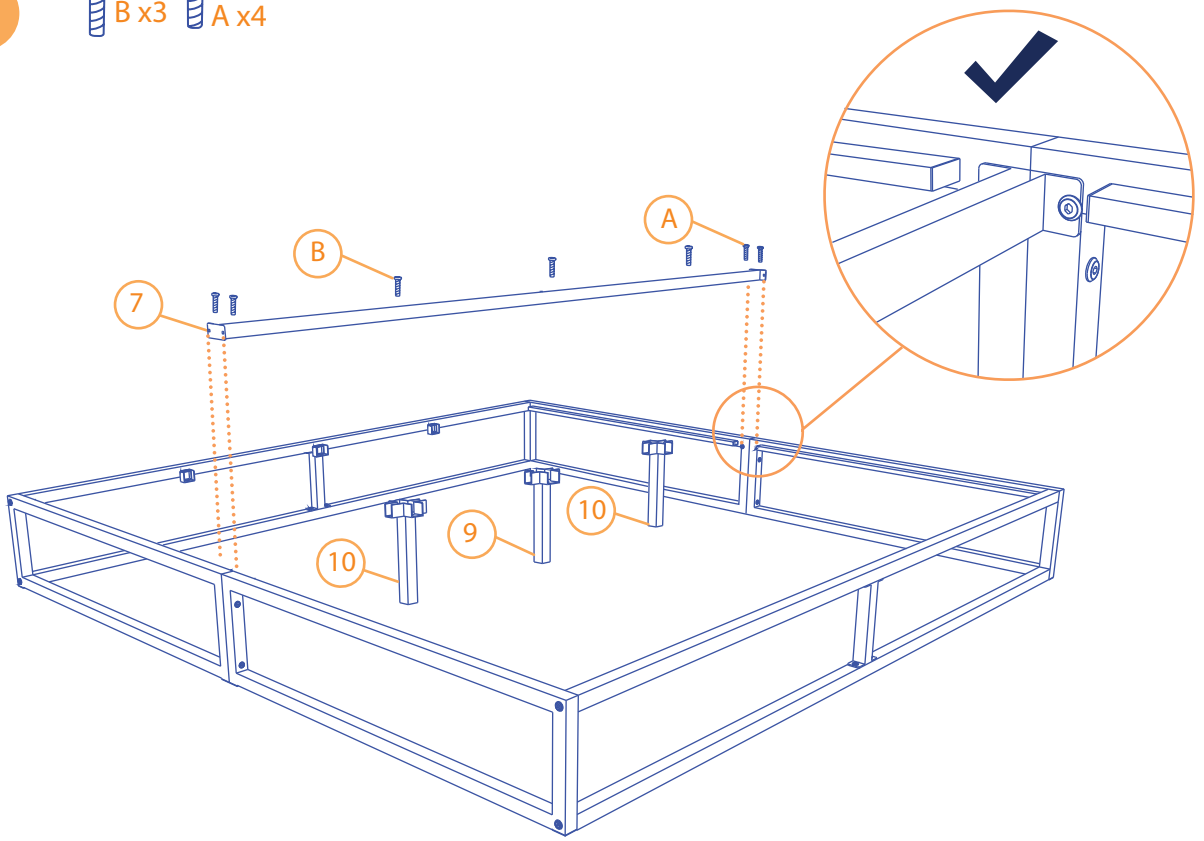

6

B x12

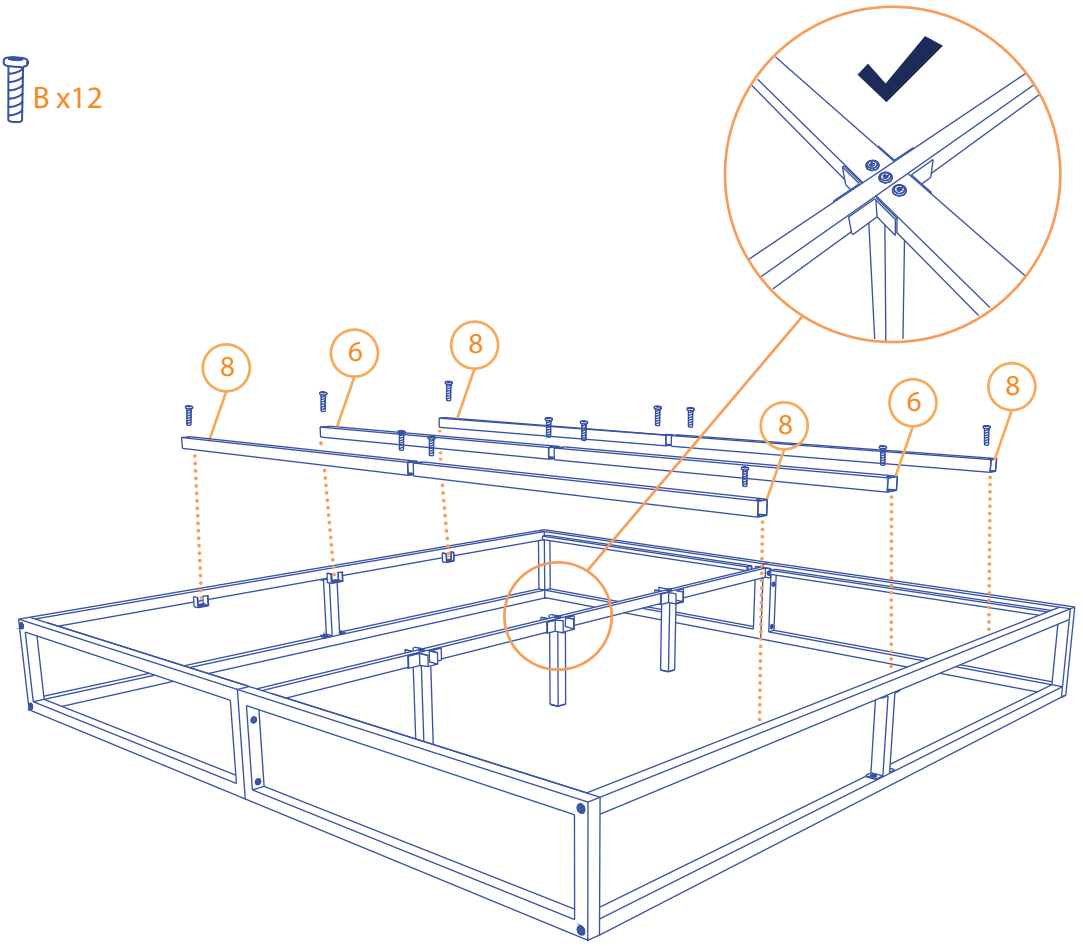

7

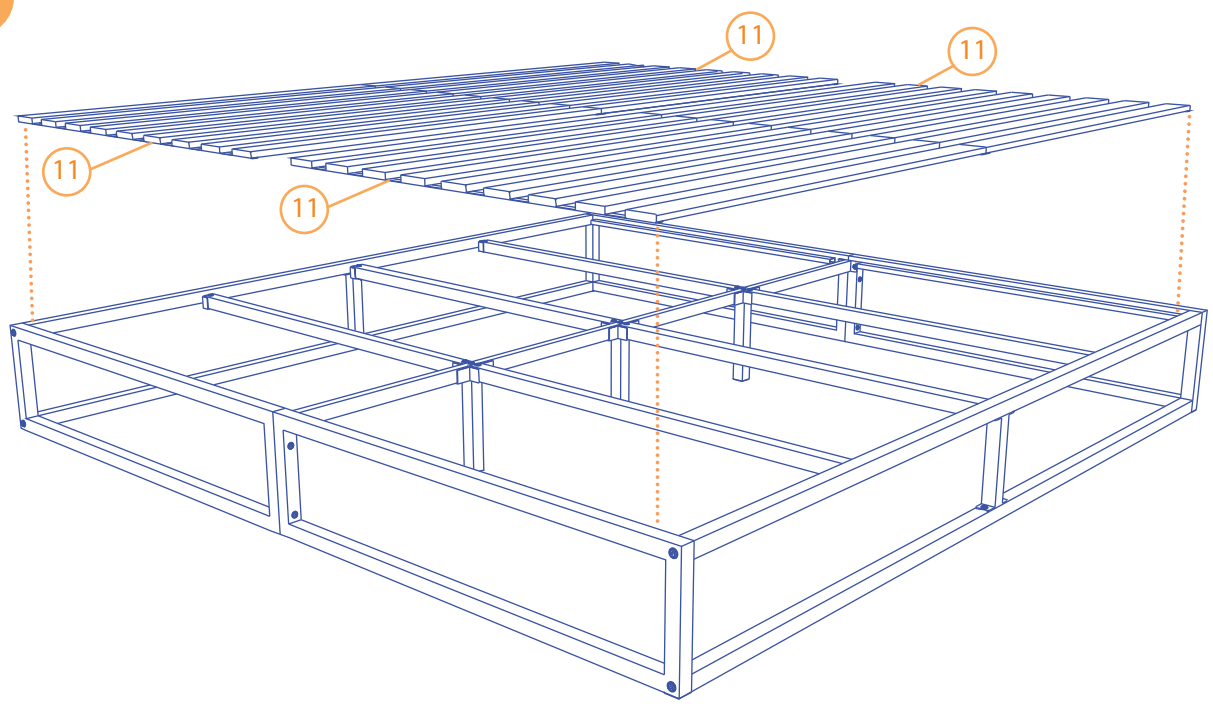

8

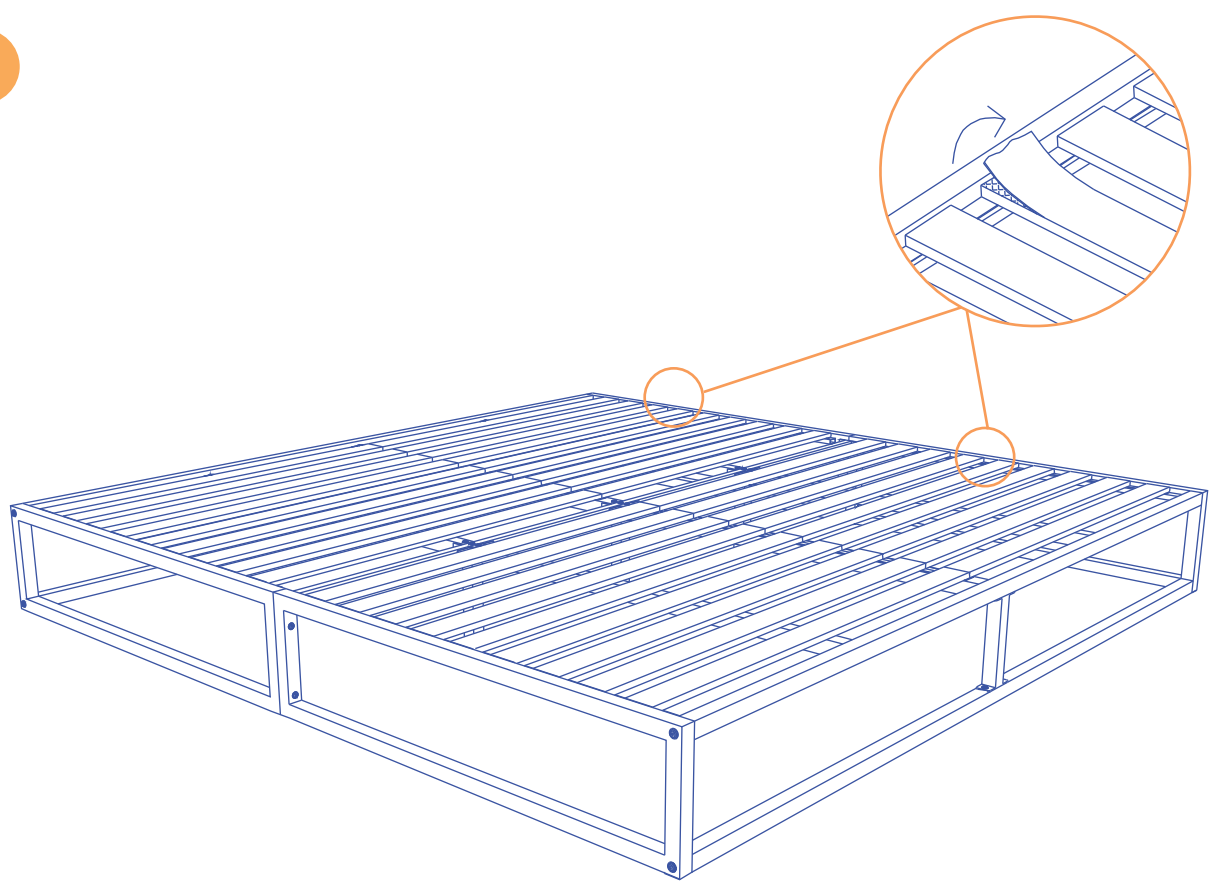

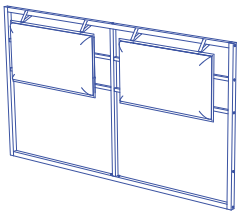

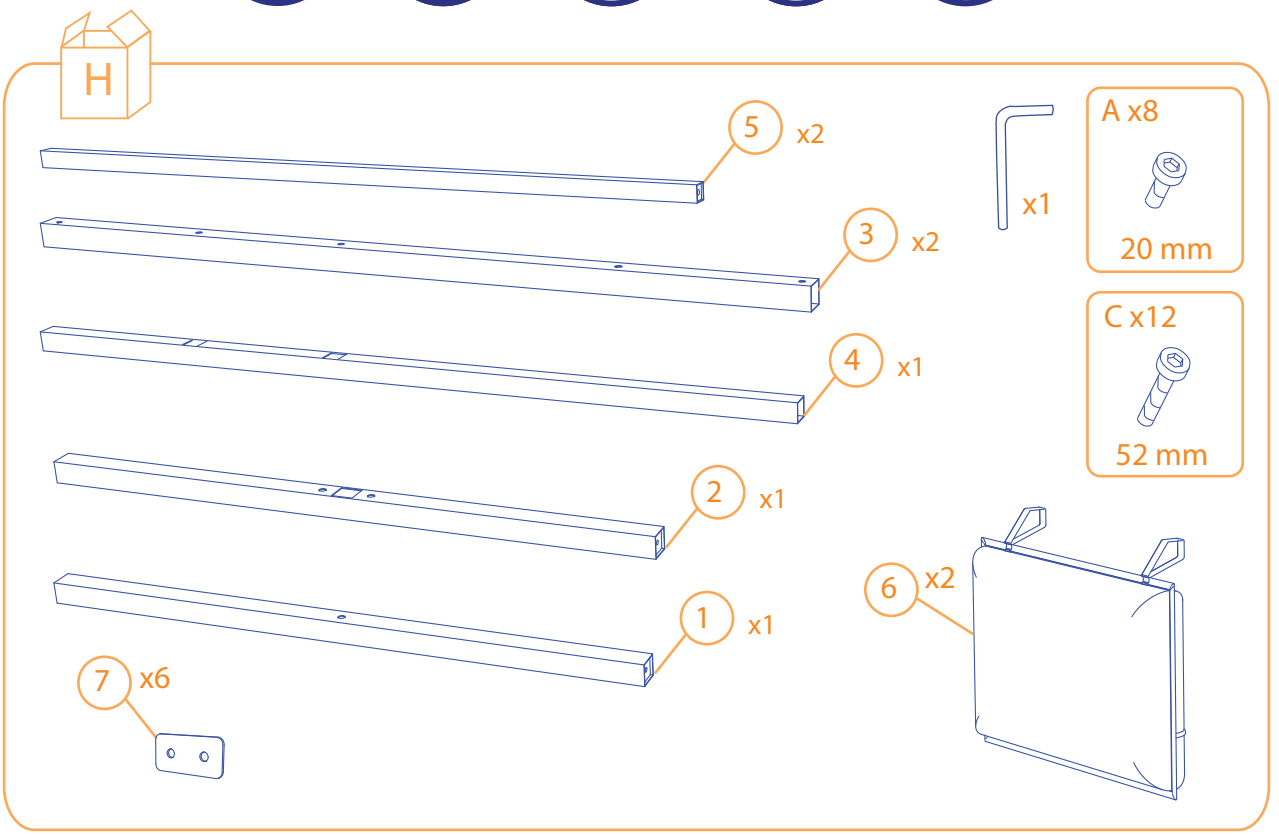
H
5 x2
3 x2
4 x1
2 x1
1 x1
7 x6
6 x2
x1
A x8
20 mm
C x12
52 mm

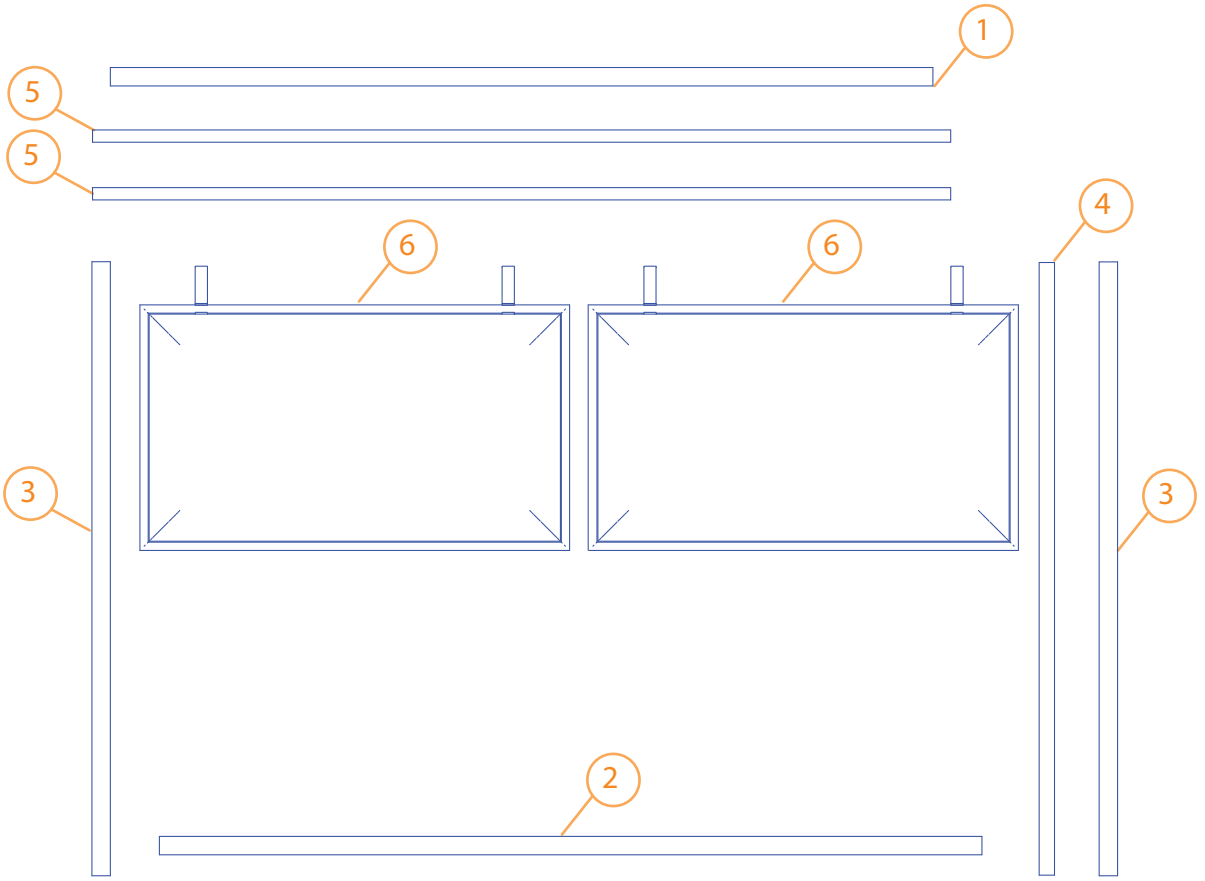
1
5
5
6
6
4
3
3
2

1

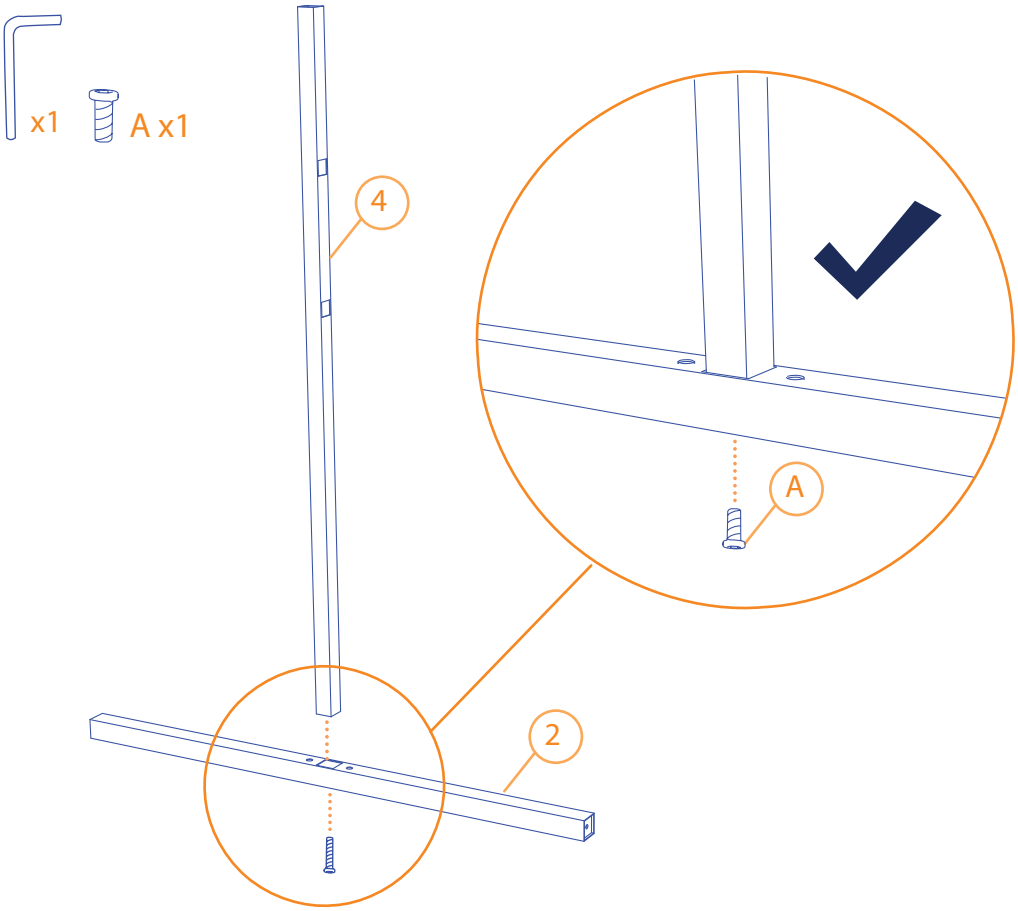

2

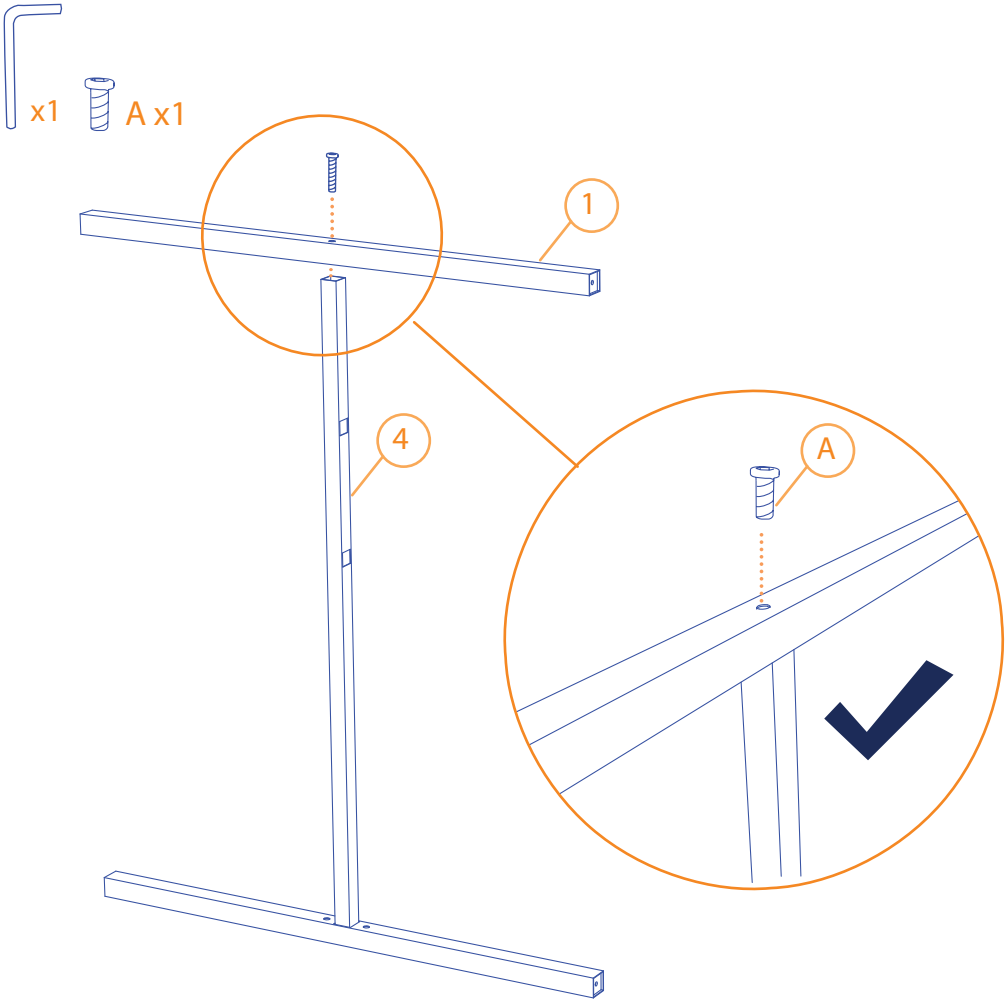

3

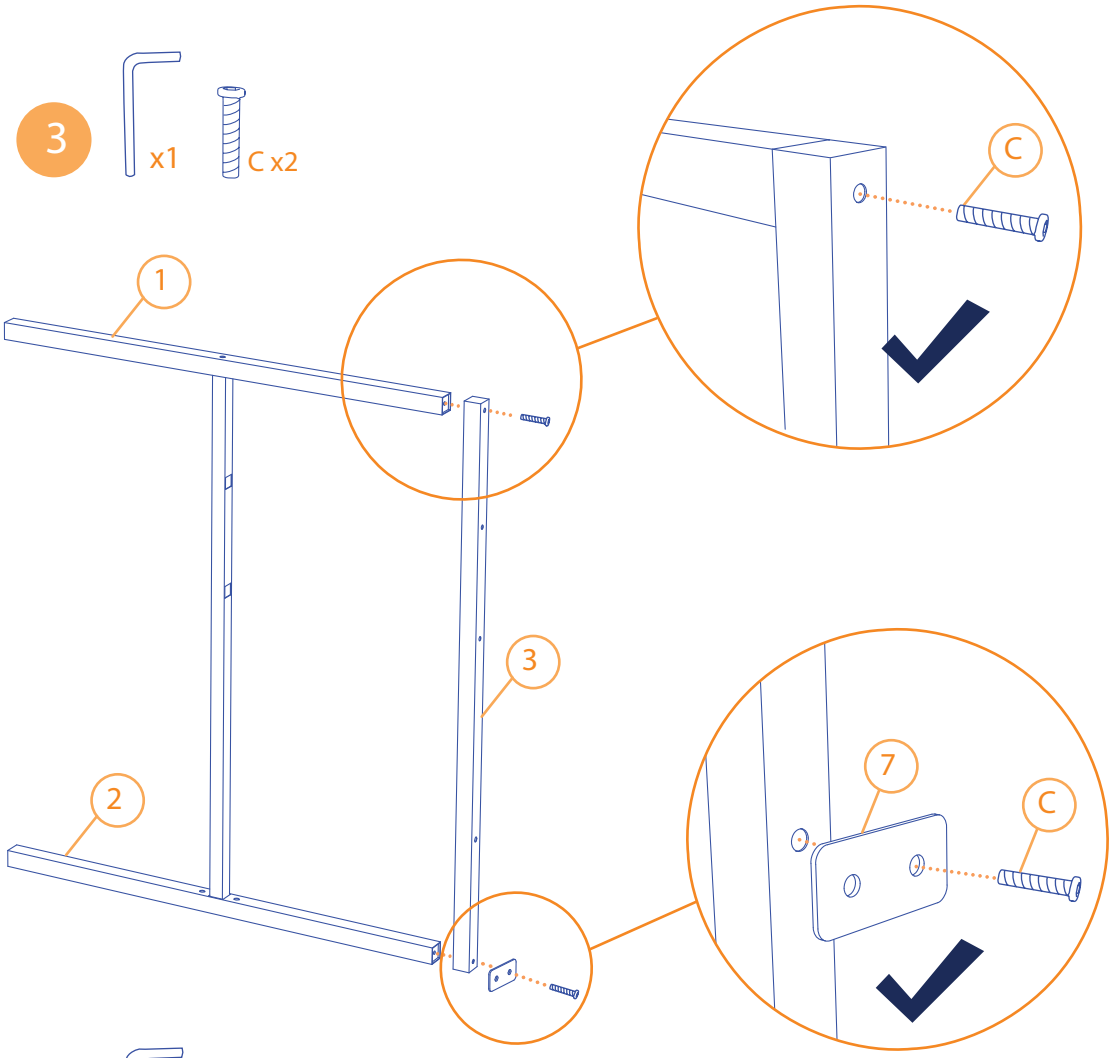

4

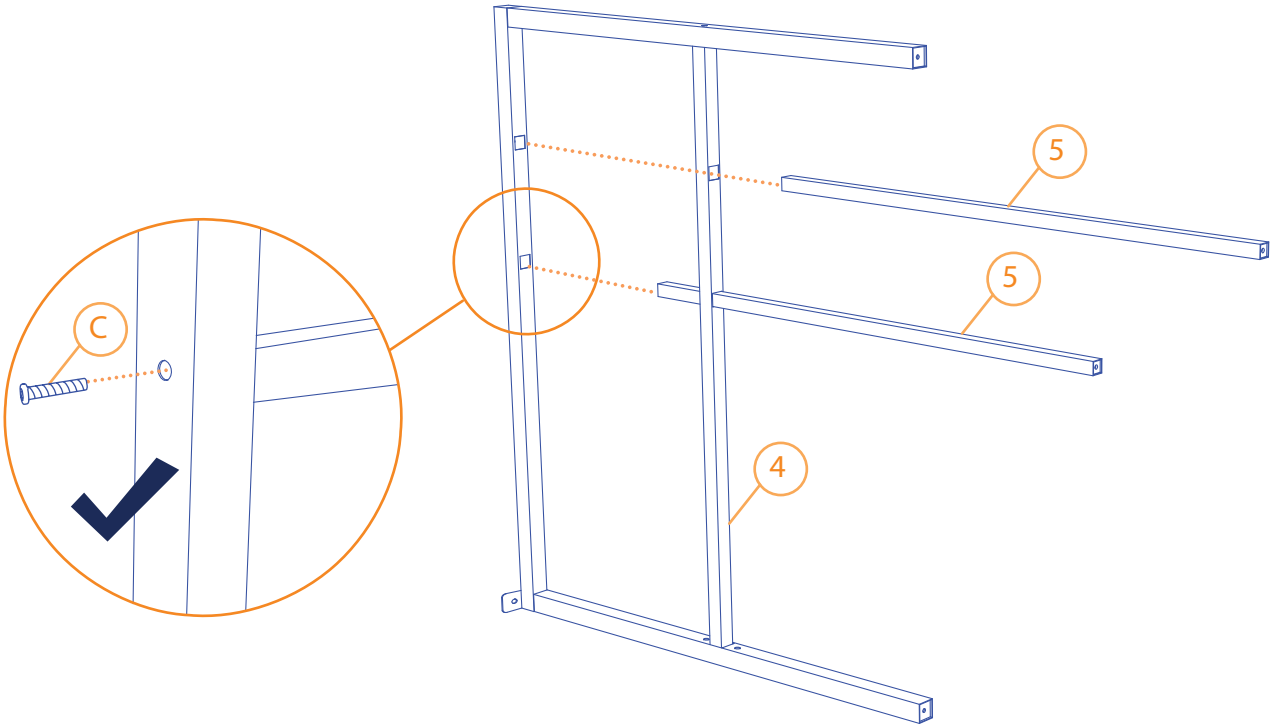

5

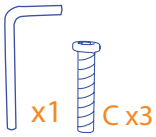

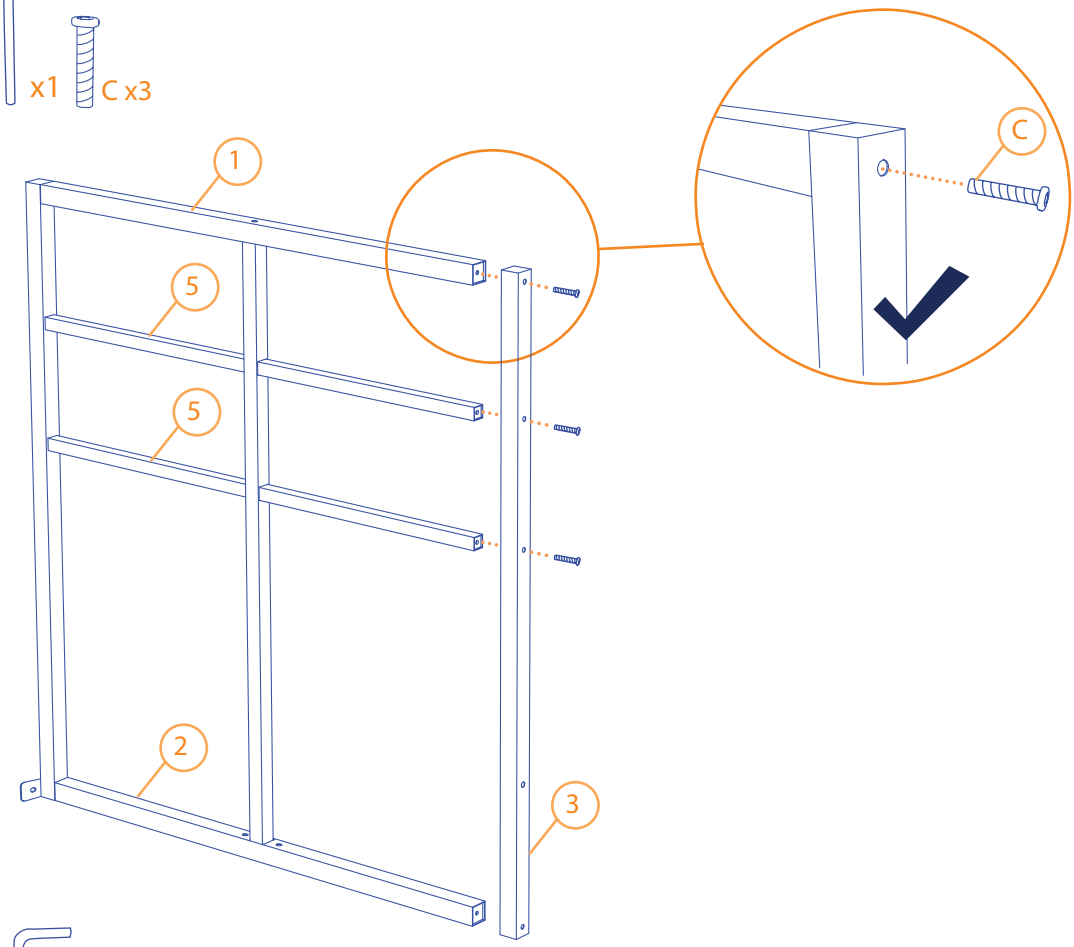

6

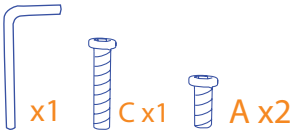

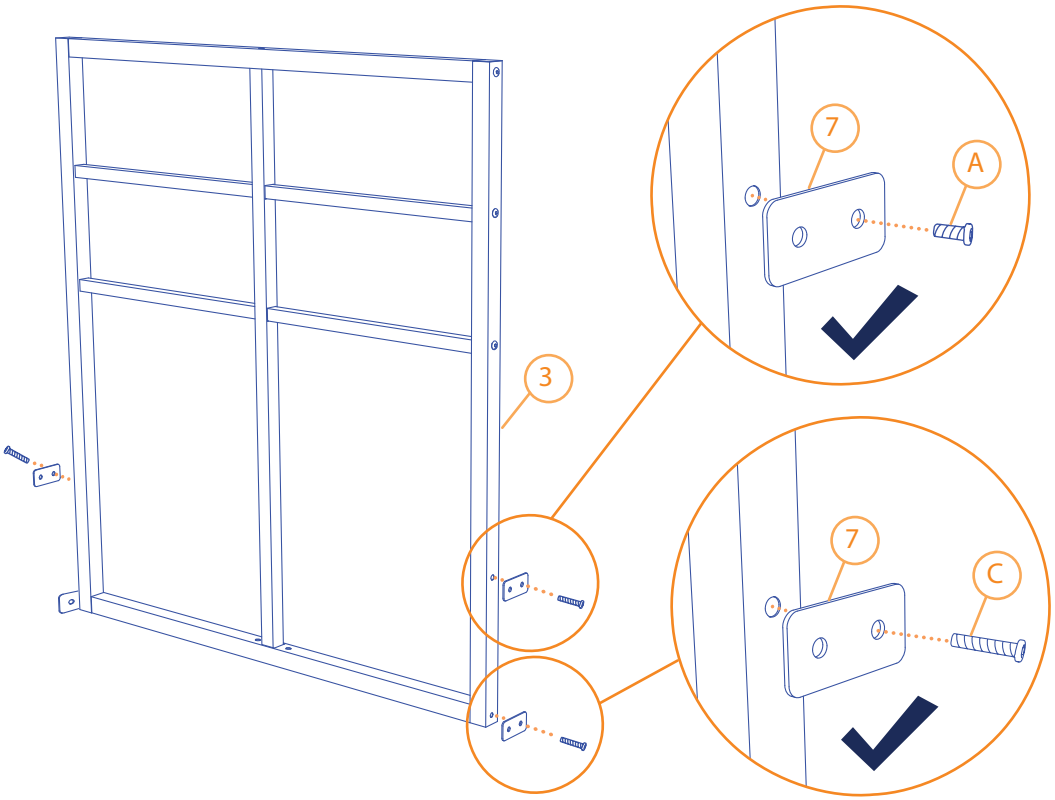

7

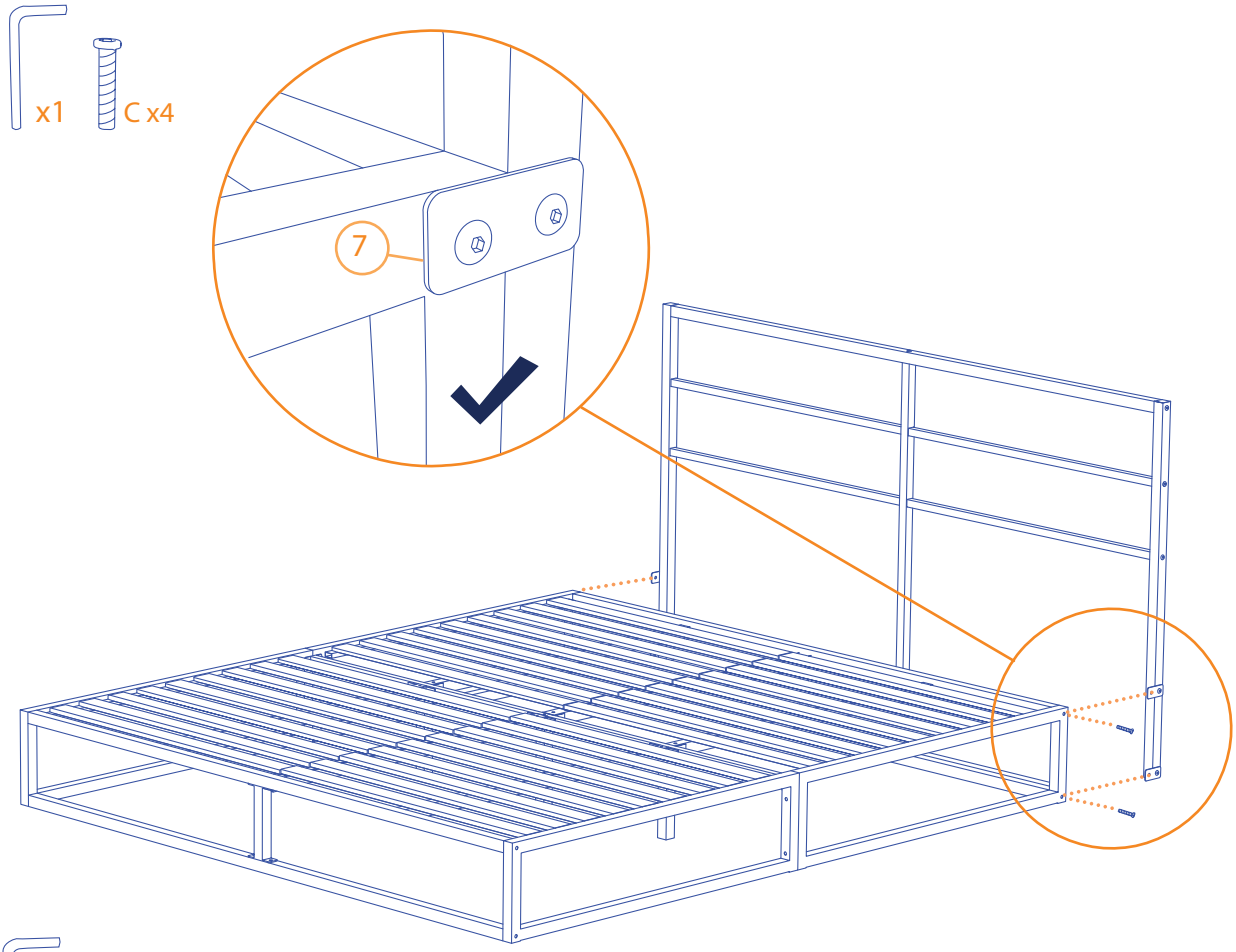

8

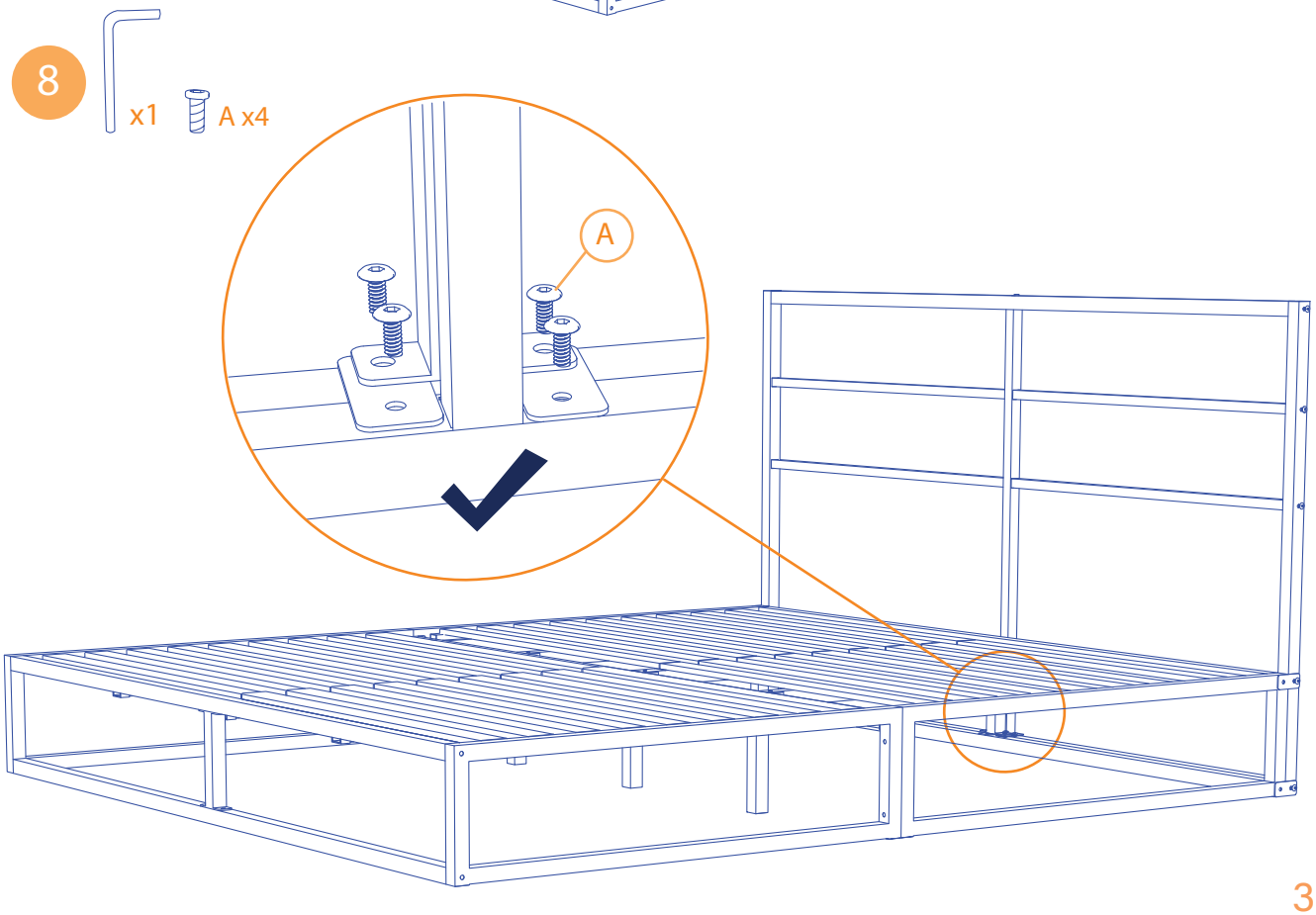

9

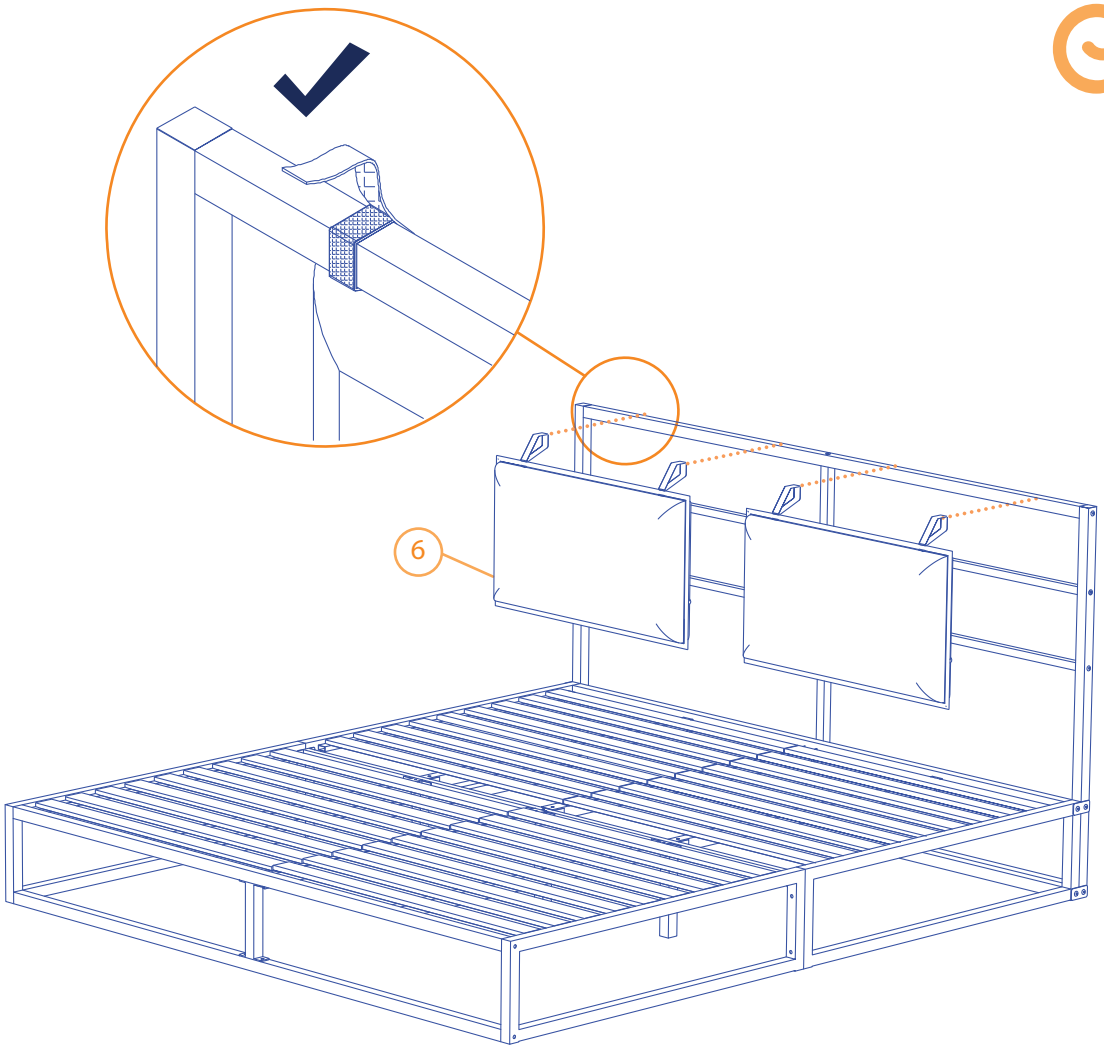

10

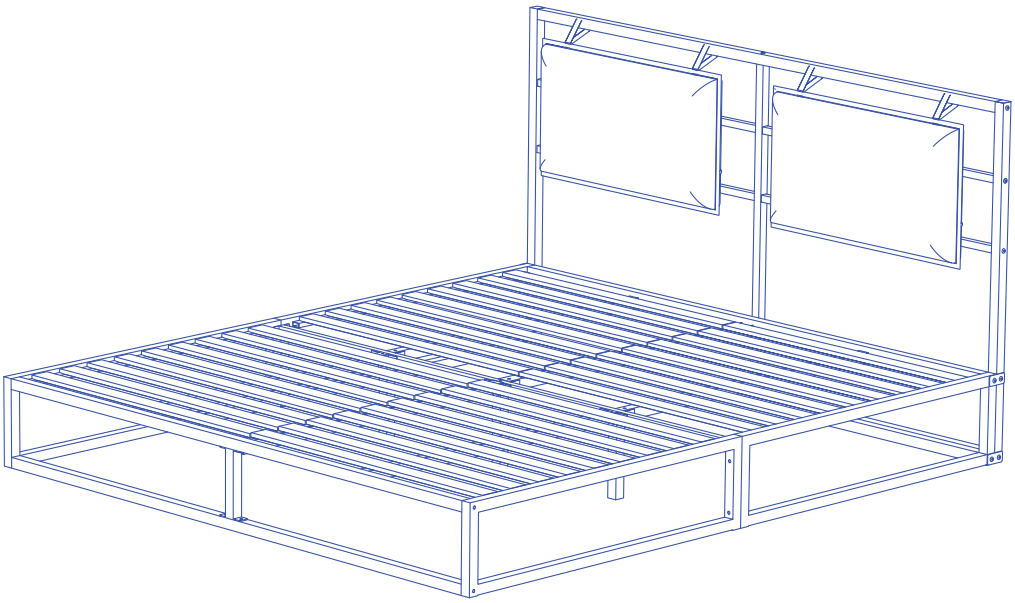

Emma Matratzen GmbH
Wilhem-Leuschner-Straße 78
60329 Frankfurt am Main