ASSEMBLY INSTRUCTION

STEP 1

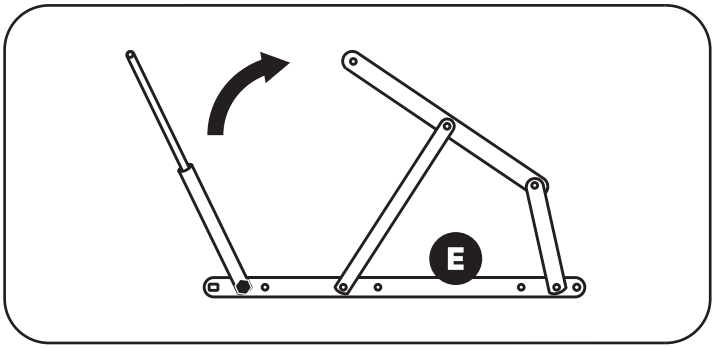

STEP 2

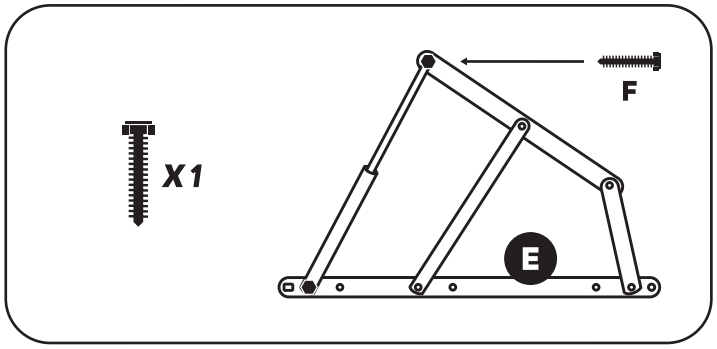

STEP 3

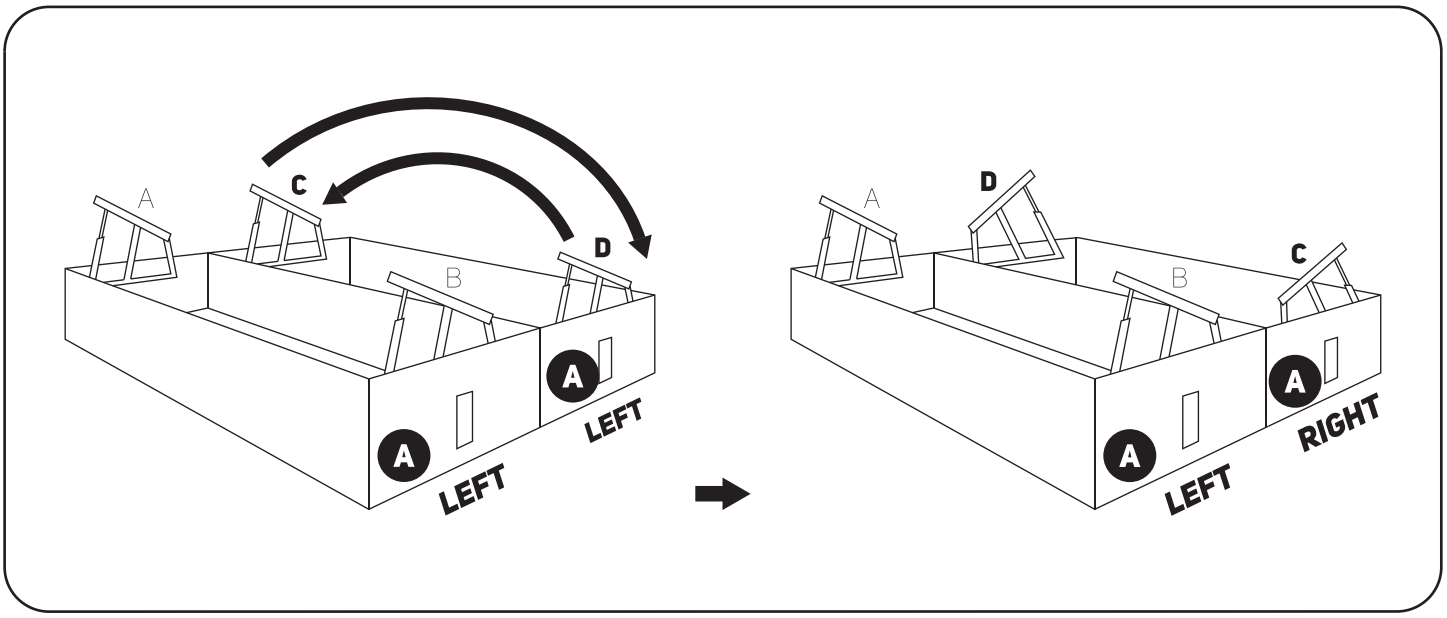

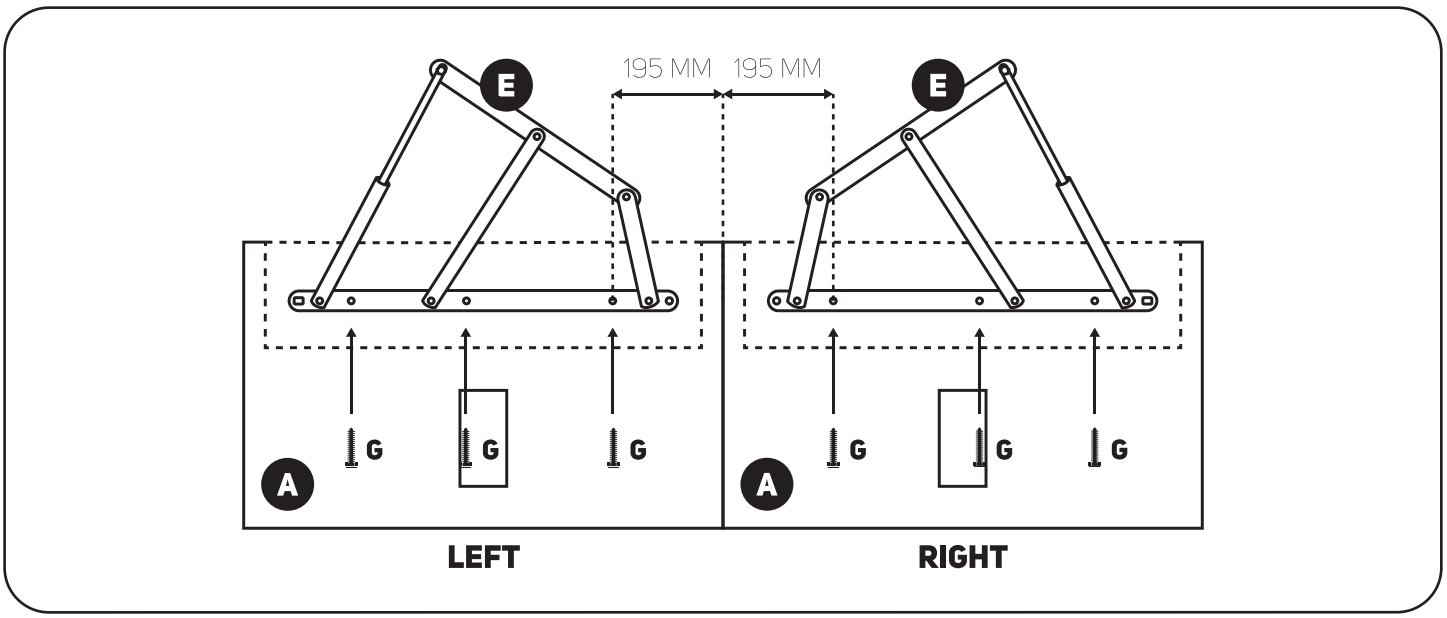

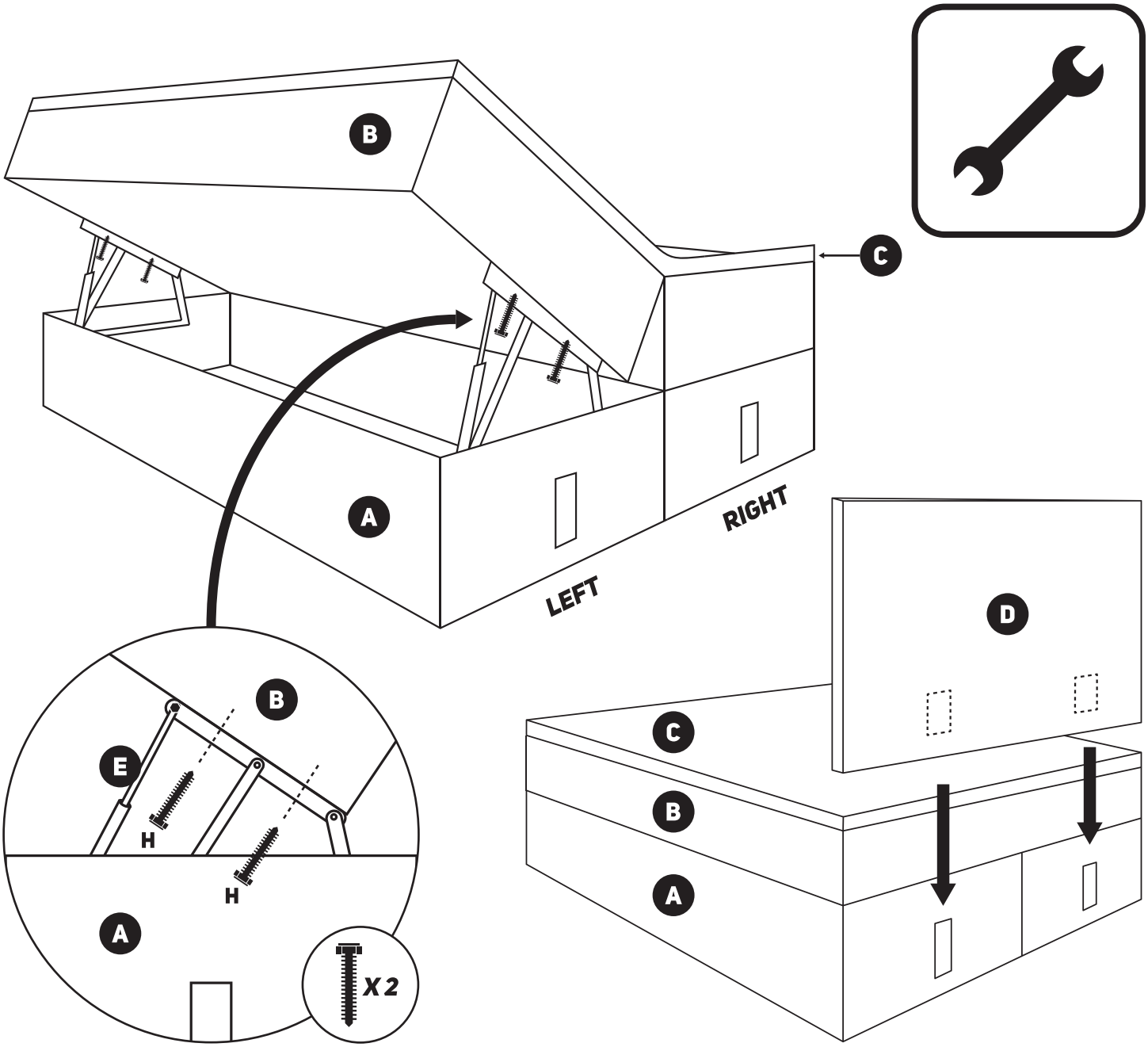
B
C
A
RIGHT
LEFT
D
C
B
A
B
E
H
H
A
X 2

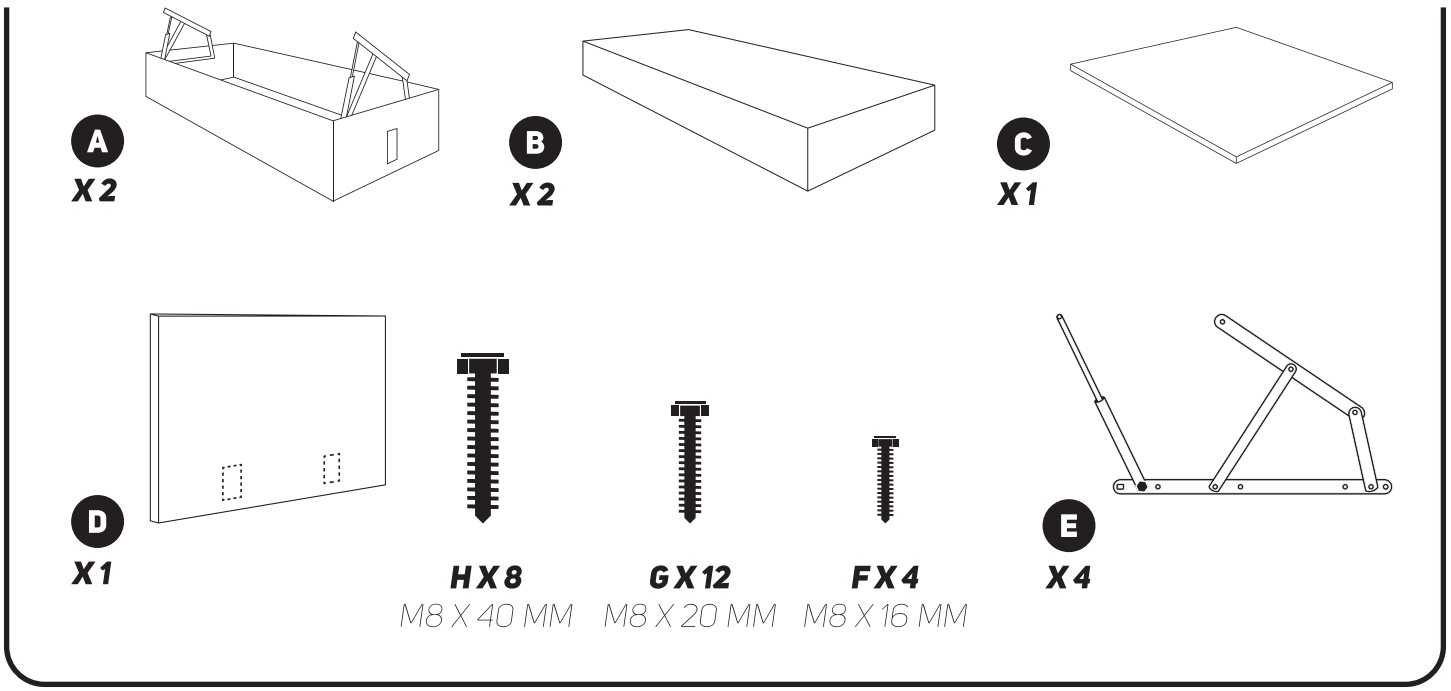
A
X 2
B
X 2
C
X 1
D
X 1
H X 8
M8 X 40 MM
G X 12
M8 X 20 MM
F X 4
M8 X 16 MM
E
X 4