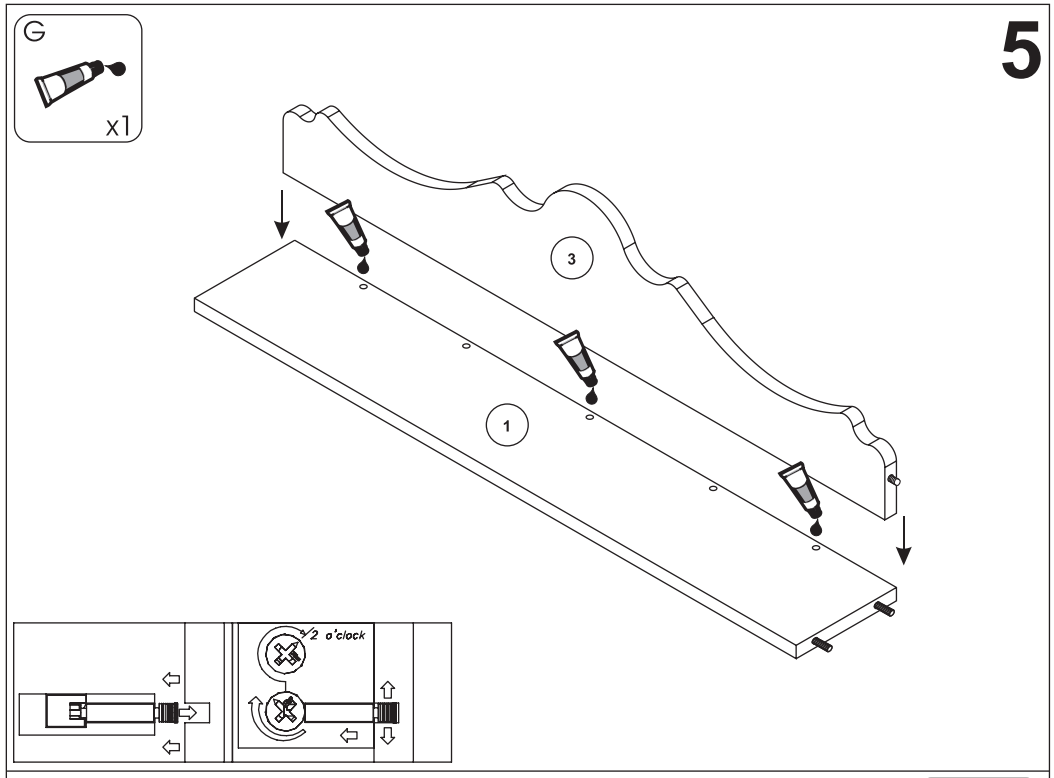

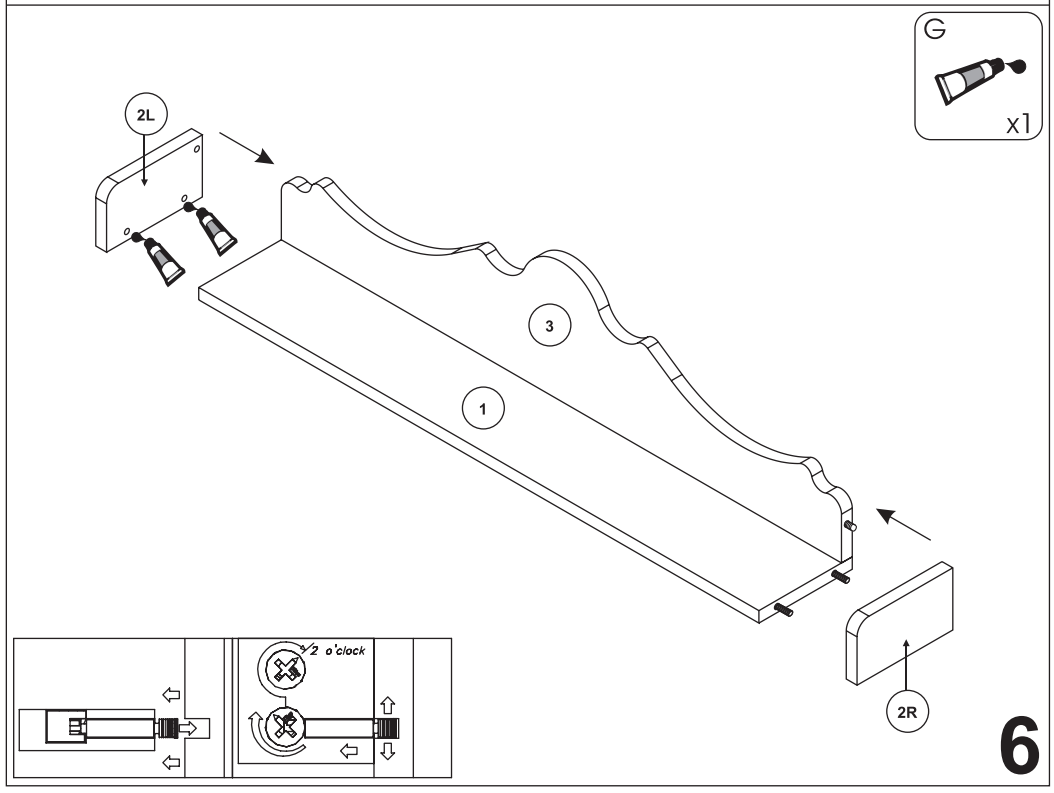

Manual instruction

Belle

SHELF

185511

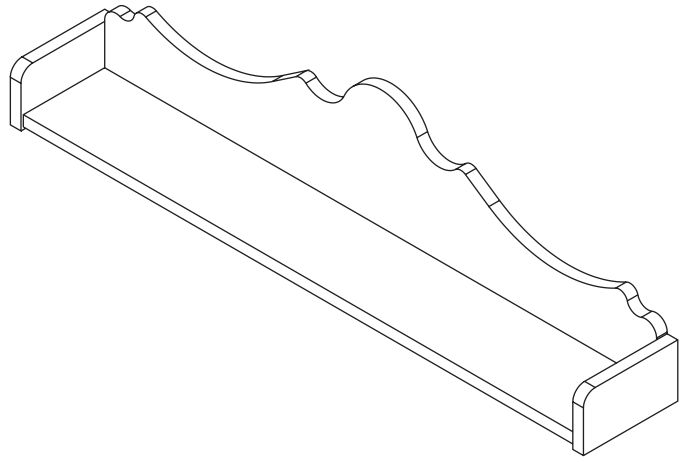

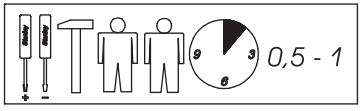

DISTRIBUTOR:

BOPITA

Edisonweg 3, 6662 NW Elst

The Netherlands

www.bopita.com

26.11.2009.

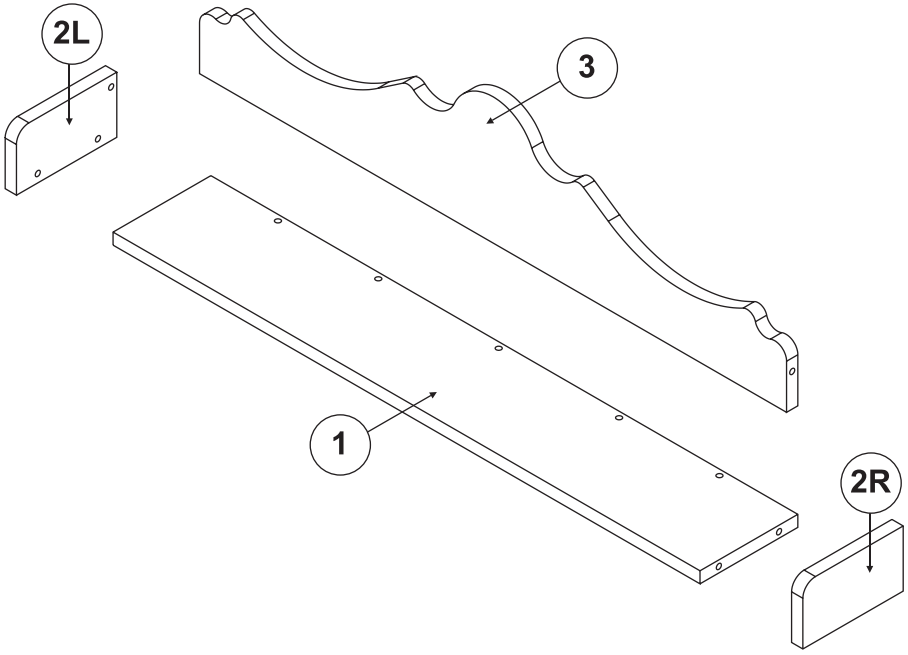
2L
3
1
2R

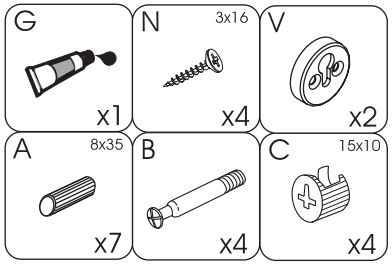
G
x1
N
3x16
x4
V
x2
A
8x35
x7
B
x4
C
15x10
x4

2

3

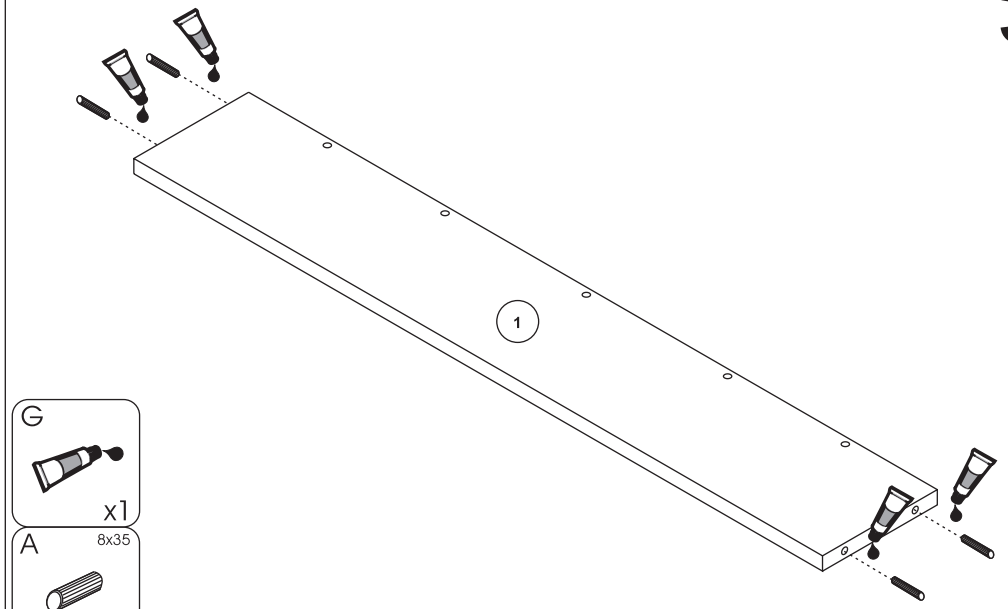
1

G
x1
A
8x35
x4

1
2
10mm

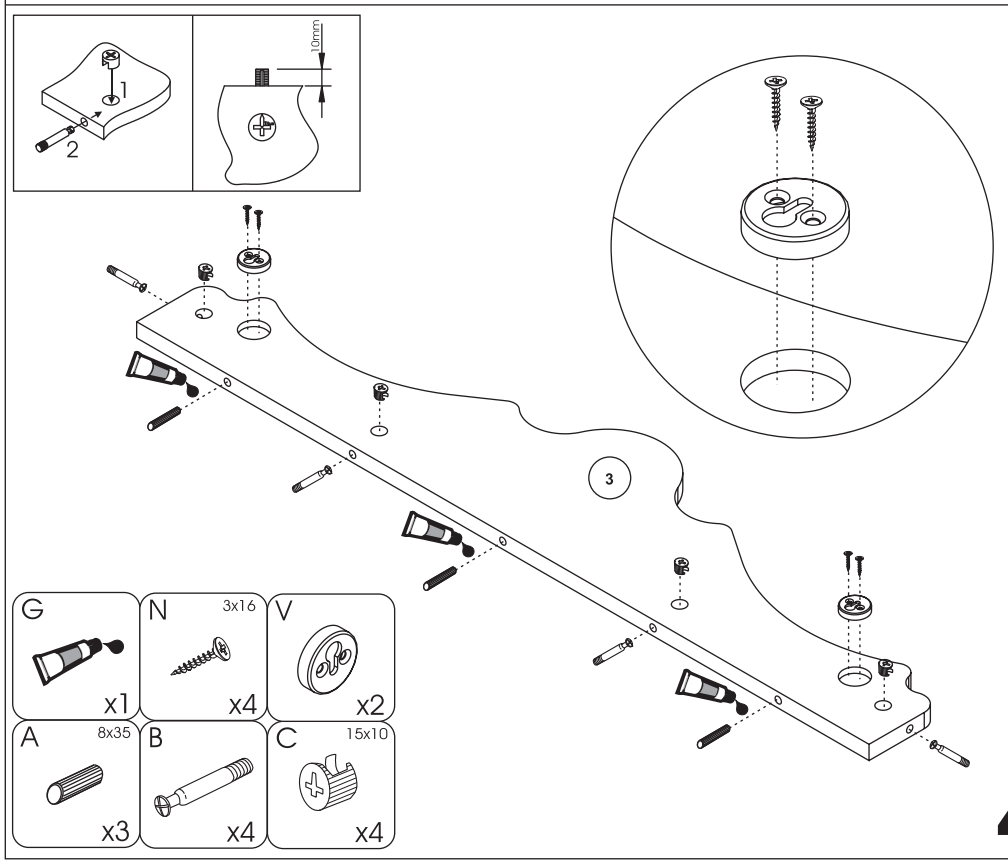
3
G
x1
N
3x16
x4
V
x2
A
8x35
x3
B
x4
C
15x10
x4

4